R88M-C6[], R88D-C6N[][][]-ECT

C6 servo system

Cost-effective modern servo technology

- EtherCAT Communications Cycle of 125 µs
- Small footprint drives to reduce cabinet size
- Direct wiring of I/O signals
- Compact and small motor size
- Absolute encoder as standard (battery needed)
- Full close loop encoder is available
- Intuitive axis setup
- Safety Function built-in:
  Hardwired STO: EN ISO13849-1 (PLe/Cat.4), EN61508 (SIL3), EN61800-5-2 (STO SIL3), EN IEC 62061 (SIL3)

Ratings

- 230 VAC single-phase, 50 W to 1.5 kW
- 400 VAC three-phase, 850 W to 7.5 kW

System configuration

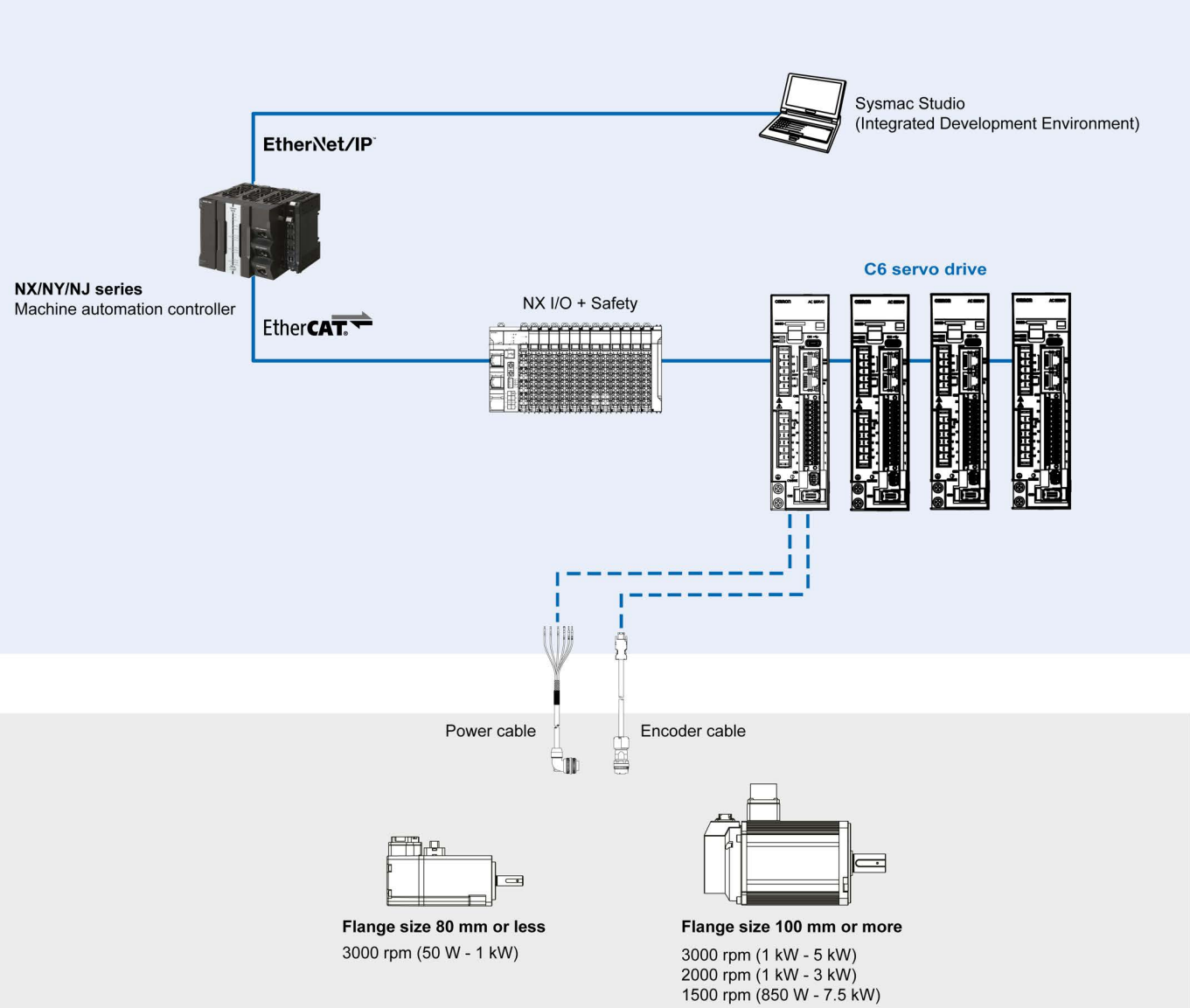

Type designation

C6 servo drive

R88D-C6	N	02	H	-ECT	-GS
(1)	(2)	(3)	(4)	(5)	(6)

No	Item	Symbol	Specifications
(1)	C6 Series servo drive		
(2)	Drive interface	N	Network type
(3)	Capacity	02	200 W
		04	400 W
		08	750 W
		10	1 kW
		15	1.5 kW
		30	3 kW
		50	5 kW
		60	6 kW
		75	7.5 kW
(4)	Voltage	H	230 VAC
		F	400 VAC
(5)	Network type	ECT	EtherCAT communications
(6)	Model type	GS	Global Sales model are compliant with Environmental regulations at EU and other areas.

C6 servo motor

R88M-C6	L	1K0	30	T	-BOS2	-GS
(1)	(2)	(3)	(4)	(5)	(6)	(7)

No	Item	Symbol	Specifications
(1)	C6 Series servo motor		
(2)	Servo motor type	L	Low-inertia type
		M	Middle-inertia type
		H	High-inertia type
(3)	Capacity	50	50 W
		100	100 W
		200	200 W
		400	400 W
		750	750 W
		850	850 W
		1K0	1 kW
		1K3	1.3 kW
		1K5	1.5 kW
		1K8	1.8 kW
		2K0	2 kW
		2K5	2.5 kW
		2K9	2.9 kW
		3K0	3 kW
		4K0	4 kW
		4K4	4.4 kW
		5K0	5 kW
		5K5	5.5 kW
		7K5	7.5 kW
(4)	Rated speed	15	1500 rpm
		20	2000 rpm
		30	3000 rpm
(5)	Voltage and encoder specifications	T	230 V, absolute encoder
		C	400 V, absolute encoder
(6)	Options		
	Brake	Blank	No brake
		B	Brake (24 VDC)
	Oil seal	Blank	No oil seal
		O	Oil seal
	Shaft end	Blank	Straight shaft, no key
		S2	Straight, key, tapped (standard)
(7)	Model type	GS	Global Sales model are compliant with Environmental regulations at EU and other areas.

Servo motor / Servo drive combinations

C6 servo motor						Compatible servo drive
Appearance	Speed	Voltage	Rated torque	Capacity	Model	
	3000 rpm	230 V	0.16 N·m	50 W	R88M-C6H05030T-[ ]S2-GS	R88D-C6N02H-ECT-GS
			0.32 N·m	100 W	R88M-C6H10030T-[ ]S2-GS	
			0.64 N·m	200 W	R88M-C6H20030T-[ ]S2-GS	
			1.27 N·m	400 W	R88M-C6H40030T-[ ]S2-GS	R88D-C6N04H-ECT-GS
			2.4 N·m	750 W	R88M-C6H75030T-[ ]S2-GS	R88D-C6N08H-ECT-GS
			3.2 N·m	1 kW	R88M-C6H1K030T-[ ]S2-GS	R88D-C6N10H-ECT-GS
			3.2 N·m	1 kW	R88M-C6L1K030T-[ ]OS2-10GS	
			4.8 N·m	1.5 kW	R88M-C6L1K530T-[ ]OS2-GS	R88D-C6N15H-ECT-GS
		400 V	3.2 N·m	1 kW	R88M-C6L1K030C-[ ]OS2-GS	R88D-C6N15F-ECT-GS
			4.8 N·m	1.5 kW	R88M-C6L1K530C-[ ]OS2-GS	
			6.4 N·m	2 kW	R88M-C6L2K030C-[ ]OS2-GS	R88D-C6N30F-ECT-GS
			8 N·m	2.5 kW	R88M-C6L2K530C-[ ]OS2-GS	
			12.8 N·m	4 kW	R88M-C6L4K030C-[ ]OS2-GS	R88D-C6N50F-ECT-GS
			16 N·m	5 kW	R88M-C6L5K030C-[ ]OS2-GS	
	2000 rpm	230 V	4.77 N·m	1 kW	R88M-C6M1K020T-[ ]OS2-GS	R88D-C6N10H-ECT-GS
			7.16 N·m	1.5 kW	R88M-C6M1K520T-[ ]OS2-GS	R88D-C6N15H-ECT-GS
		400 V	4.77 N·m	1 kW	R88M-C6M1K020C-[ ]OS2-GS	R88D-C6N15F-ECT-GS
			7.16 N·m	1.5 kW	R88M-C6M1K520C-[ ]OS2-GS	
			9.55 N·m	2 kW	R88M-C6M2K020C-[ ]OS2-GS	R88D-C6N30F-ECT-GS
			14.3 N·m	3 kW	R88M-C6M3K020C-[ ]OS2-GS	
	1500 rpm	230 V	5.39 N·m	850 W	R88M-C6H85015T-[ ]OS2-GS	R88D-C6N10H-ECT-GS
			8.34 N·m	1.5 kW	R88M-C6H1K315T-[ ]OS2-GS	R88D-C6N15H-ECT-GS
		400 V	5.39 N·m	850 W	R88M-C6H85015C-[ ]OS2-GS	R88D-C6N15F-ECT-GS
			8.34 N·m	1.3 kW	R88M-C6H1K315C-[ ]OS2-GS	
			11.5 N·m	1.8 kW	R88M-C6H1K815C-[ ]OS2-GS	R88D-C6N30F-ECT-GS
			18.5 N·m	2.9 kW	R88M-C6H2K915C-[ ]OS2-GS	
			28 N·m	4.4 kW	R88M-C6H4K415C-[ ]OS2-GS	R88D-C6N50F-ECT-GS
			35 N·m	5.5 kW	R88M-C6H5K515C-[ ]OS2-GS	R88D-C6N60F-ECT-GS
			48 N·m	7.5 kW	R88M-C6H7K515C-[ ]OS2-GS	R88D-C6N75F-ECT-GS

Specifications

C6 servo drive

General specifications

Item			Specifications
Operating ambient temperature and humidity			0 to 55°C, 85% RH or less (with no condensation)
Storage ambient temperature and humidity			-20 to 65°C, 85% RH or less (with no condensation)
Operating and storage atmosphere			No corrosive gases, etc.
Operating altitude			1000 m max.
Vibration resistance			10 to 60 Hz, and at an acceleration of 9.8 m/s^2 or less (Not to be run continuously at the resonance frequency)
Dielectric strength			Between power supply terminals/power terminals and PE terminals: 1500 VAC for 1 minute (50/60 Hz)
International standard	EU Directives	EMC Directives	EN 61800-3
		Low Voltage	EN61800-5-1
		Machinery*1	EN ISO 13849-1, EN 61508, EN 61800-5-2, EN IEC 62061
	UL standards		UL61800-5-1 FSPC*2 (UL61800-5-2, IEC61800-5-2, IEC61508-1, IEC61508-2, ISO13849-1)
	CSA standards		CSA C22.2 No.274
	Korean Radio Regulations		Compliant

*1 Machinery Directive: details are as follows:
STO function based on safety input signals: EN ISO 13849-1 (PLe/Cat.4), EN 61508, EN 61800-5-2 (STO SIL3), EN IEC 62061 (SIL3)
*2 UL FSPC: details are as follows:
STO function controlled by safety input signals: UL61800-5-2 (STO SIL3), IEC61800-5-2 (STO SIL3), IEC 61508-1 (SIL3), IEC61508-2 (SIL3), ISO13849-1 (PLe/Cat.4)

Single-phase, 230 V

Servo drive model		R88D-C6N02H-[]	R88D-C6N04H-[]	R88D-C6N08H-[]	R88D-C6N10H-[]	R88D-C6N15H-[]
Main circuit		Single-phase, 200 to 240 VAC±10%, 50/60 Hz				
Control circuit		Single-phase, 200 to 240 VAC±10%, 50/60 Hz				
Rated input current [A (rms)]	Single-phase	2.4	4.1	6.7	8.6	13.8
Rated current [A (rms)]		1.8	3	4.5	6	10
Maximum current [A (rms)]		5.4	12	15	21	30
Insulation voltage		Primary to ground: Withstand voltage 1500 VAC, 1 min (leakage current: 20 mA				
Applicable Servomotor rated output [W]		200	400	750	1000	1500
SCCR [A (rms)]		5000				
Weight [kg]		0.82	1.15	1.58	1.71	1.71

Three-phase, 400 V

Servo drive model		R88D-C6N15F-[]	R88D-C6N30F-[]	R88D-C6N50F-[]	R88D-C6N60F-[]	R88D-C6N75F-[]
Main circuit		3-phase, 380 to 480 VAC±10%, 50/60 Hz				
Control circuit		Single-phase, 380 to 480 VAC±10%, 50/60 Hz				
Rated input current [A (rms)]	3-Phase	4.3	8	12	16	21
Rated current [A (rms)]		6	13	17	21	26
Maximum current [A (rms)]		18	40	42.5	52.5	65
Insulation voltage		Primary to ground: Withstand voltage 1500 VAC, 1 min (leakage current: 20 mA)				
Applicable Servomotor rated output [W]		1500	3000	5000	6000	7500
SCCR [A (rms)]		5000				
Weight [kg]		1.83	1.83	4.05		

EtherCAT Communications Specifications

Item	Specification
Communications standard	IEC 61158 Type 12, IEC 61800-7 CiA 402 drive profile
Physical layer	100Base - Tx
Connectors	RJ45 × 2 (Input: IN, Output: OUT)
Communication speed	2 × 100 Mbps (full duplex)
Communication cable	Shielded twisted pair CAT5e (straight-through/crossover)
Communications distance	Max. 100 m (between nodes) / daisy chain
Sync manager	SM0: Output mailbox SM1: Input mailbox SM2: Output process data SM3: Input process data
FMMU	FMMU0: Mapped to the process data (RxPDO) receive area FMMU1: Mapped to the process data (TxPDO) transmit area FMMU2: Mapped to mailbox status
Application layer protocol	CoE: CANopen over EtherCAT
Synchronization mode	SM Event (SM mode supports only PP, PV, TQ, and HM modes) DC SYNC Event
Communication object	SDO: Aperiodic data PDO: Cyclic data EMCY: Emergency
Indicators	EtherCAT RUN × 1 EtherCAT ERR × 1 EtherCAT Link/Activity × 2
Operating mode	Profile Position Mode (PP) Profile Velocity Mode (PV) Profile Torque Mode (TQ) Homing Mode (HM) Cycle Synchronized Position Mode (CSP) Cycle Synchronized Velocity Mode (CSV) Cycle Synchronized Torque Mode (CST

C6 servo motor

General specifications

Item			Specifications
Encoder type			26-bit multi-turn absolute optical encoder
Insulation class			Class F (155°C)
Installation conditions			Indoor installation; avoid direct sunlight, corrosive and flammable gases
Ambient temperature			Operating temperature: 0°C to 40°C; Storage temperature: -20°C to 60°C
Humidity			Storage and use: 20–85% RH (with no condensation)
Altitude			1000 m max.
Vibration			49 m/s^2 or less, 10–60 Hz (Not to be run continuously at the resonance frequency)
Dielectric strength			Between windings and frame: 1500 VAC for 1 minute (at 230 V) Between windings and frame: 1800 VAC for 1 minute (at 400 V) Between brake windings and housing: 500 VAC for 1 minute
International standard	**EU**	**EMCs**	EN 61000-6-2, EN 61000-6-4
		LVD	EN60034-1, EN60034-5
	UL		UL1004-1, UL1004-6
	CSA		CSA C22.2 No.100
	GB		GB30253

Encoder specifications

Item	Specifications
Supply voltage (VCC)	4.5 to 5.5 VDC (Typ 5V)
External battery voltage	3.3 to 5.5 VDC (Typ 3.6V)
Current Consumption at VCC	Typ 160 mA
External battery current consumption	Typ 15 µA
Pulses per revolution	67,108,864 (26-Bit)
Multi-rotation data hold	65,535 (16-bit)
Communication method	Half-duplex aperiodic serial communication
Communication speed	4 Mbps
Operating temperature	0 to 105°C

3000 rpm servo motors, 230 V

Ratings and specifications

Model									
Item	**Unit**	**R88M-C6H05030T**	**R88M-C6H10030T**	**R88M-C6H20030T**	**R88M-C6H40030T**	**R88M-C6H75030T**	**R88M-C6H1K030T**	**R88M-C6L1K030T-[][]-10**	**R88M-C6L1K530T**
Rated voltage	**V**	230 VAC							
Rated output	**W**	50	100	200	400	750	1000		1500
Rated torque	**N m**	0.16	0.32	0.64	1.27	2.4	3.2	3.2	4.8
Rated rotation speed	**rpm**	3000							
Maximum rotation speed	**rpm**	6000							5700
Momentary maximum torque	**N·m**	0.64	1.28	2.24	4.445	8.4	11.2	9.6	14.7
Rated current	**A**	1.4	1.3	1.7	2.8	4.5	5.9	6.6	9.6
Momentary maximum current	**A**	6	5.2	5.9	9.8	16.7	21.6	24	36.5
Rotor inertia	**kg·m^2 Without brake**	0.0383×10^{-4}	0.0702×10^{-4}	0.31×10^{-4}	0.59×10^{-4}	1.46×10^{-4}	1.82×10^{-4}	1.79×10^{-4}	2.37×10^{-4}
	kg·m^2 With brake	0.0395×10^{-4}	0.0724×10^{-4}	0.32×10^{-4}	0.61×10^{-4}	1.63×10^{-4}	1.96×10^{-4}	2.67×10^{-4}	3.25×10^{-4}
Recommended load-to-inertia ratio	**-**	≤30				≤20		≤10	
Torque constant	**N·m/A (rms)**	0.114	0.246	0.376	0.453	0.533	0.542	0.485	0.51
Allowable radial load	**N**	60		200	240	270		392	
Allowable thrust load	**N**	50		70		90		147	
Weight	**kg Without brake**	0.32	0.44	0.8	1.2	2.2	2.6	3.8	4.5
	kg With brake	0.5	0.6	1.2	1.6	2.9	3.3	5.2	6.0
Insulation class	**-**	F							
Degree of protection (excluding shaft-through section)	**-**	IP67							
Radiator plate dimensions (material)	**mm**	200×200×6 Aluminum		250×250×6 Aluminum			300×300×12 Aluminum		
Brake specifications — **Moment of inertia**	**kg·m^2**	0.00231×10^{-4}		0.0112×10^{-4}		0.0935×10^{-4}		0.441×10^{-4}	
Excitation voltage	**V**	24 VDC							
Current consumption	**A**	0.26		0.4		0.36		0.6	
Static friction torque	**N·m**	0.32 min.		1.5 min.		3.8 min.		8 min.	
Attraction time	**ms**	50 max.				60 max.		80 max.	
Release time	**ms**	20 max.				40 max.			
Flange	**mm**	40 × 40		60 × 60		80 × 80		100 × 100	

Torque-speed characteristics

R88M-C6H05030T (50 W)

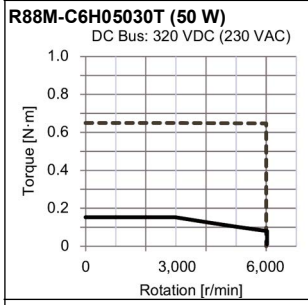

R88M-C6H10030T (100 W)

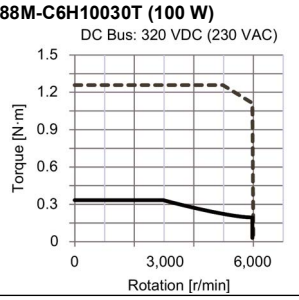

R88M-C6H20030T (200 W)

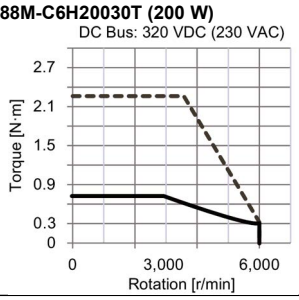

R88M-C6H40030T (400 W)

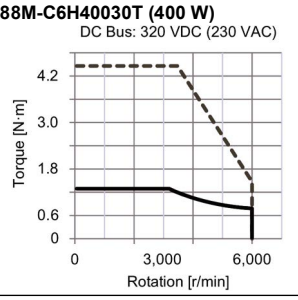

R88M-C6H75030T (750 W)

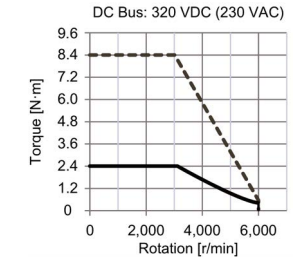

R88M-C6H1K030T (1 kW)

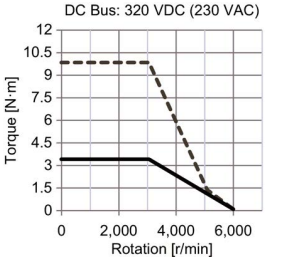

R88M-C6L1K030T-[][]-10 (1 kW)

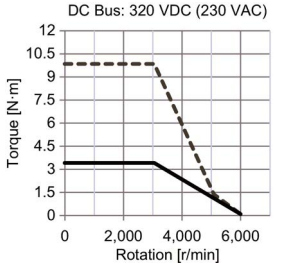

R88M-C6L1K530T (1.5 kW)

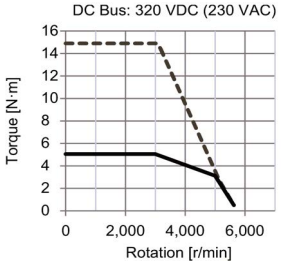

- - - - - - Maximum peak torque
——— Maximum continuous torque

3000 rpm servo motors, 400 V

Ratings and specifications

Model								
Item		**Unit**	**R88M-C6L1K030C**	**R88M-C6L1K530C**	**R88M-C6L2K030C**	**R88M-C6L2K530C**	**R88M-C6L4K030C**	**R88M-C6L5K030C**
Rated voltage		**V**	400 VAC					
Rated output		**W**	1000	1500	2000	2500	4000	5000
Rated torque		**N m**	3.2	4.8	6.4	8	12.8	16
Rated rotation speed		**rpm**	3000					
Maximum rotation speed		**rpm**	6000				5000	
Momentary maximum torque		**N·m**	9.6	14.7	19.2	24	38.4	48
Rated current		**A**	3.8	5.7	7.4	7.7	13	15
Momentary maximum current		**A**	14	21	25.5	26	42	46
Rotor inertia		**kg·m^2 Without brake**	1.79×10^{-4}	2.37×10^{-4}	2.98×10^{-4}	3.68×10^{-4}	9×10^{-4}	13.5×10^{-4}
		kg·m^2 With brake	2.67×10^{-4}	3.25×10^{-4}	3.86×10^{-4}	4.56×10^{-4}	11.7×10^{-4}	16.2×10^{-4}
Recommended load-to-inertia ratio		**-**	≤10				≤5	
Torque constant		**N·m/A (rms)**	0.842	0.86	0.86	1.04	0.98	1.1
Allowable radial load		**N**	392				980	
Allowable thrust load		**N**	147				396	
Weight		**kg Without brake**	3.8	4.5	5.2	6.2	13.3	18
		kg With brake	5.2	6.0	6.7	7.6	15.5	20.2
Insulation class		**-**	F					
Degree of protection (excluding shaft-through section)		**-**	IP67					
Radiator plate dimensions (material)		**mm**	300×300×12 Aluminum				400×400×20 Iron	
Brake specifi-cations	**Moment of inertia**	**kg·m^2**	0.441×10^{-4}				1.105×10^{-4}	
	Excitation voltage	**V**	24 VDC					
	Current consumption	**A**	0.6				0.8	
	Static friction torque	**N·m**	8 min.				18 min.	
	Attraction time	**ms**	80 max				100 max.	
	Release time	**ms**	40 max.					
Flange		**mm**	100 × 100				130 × 130	

Torque-speed characteristics

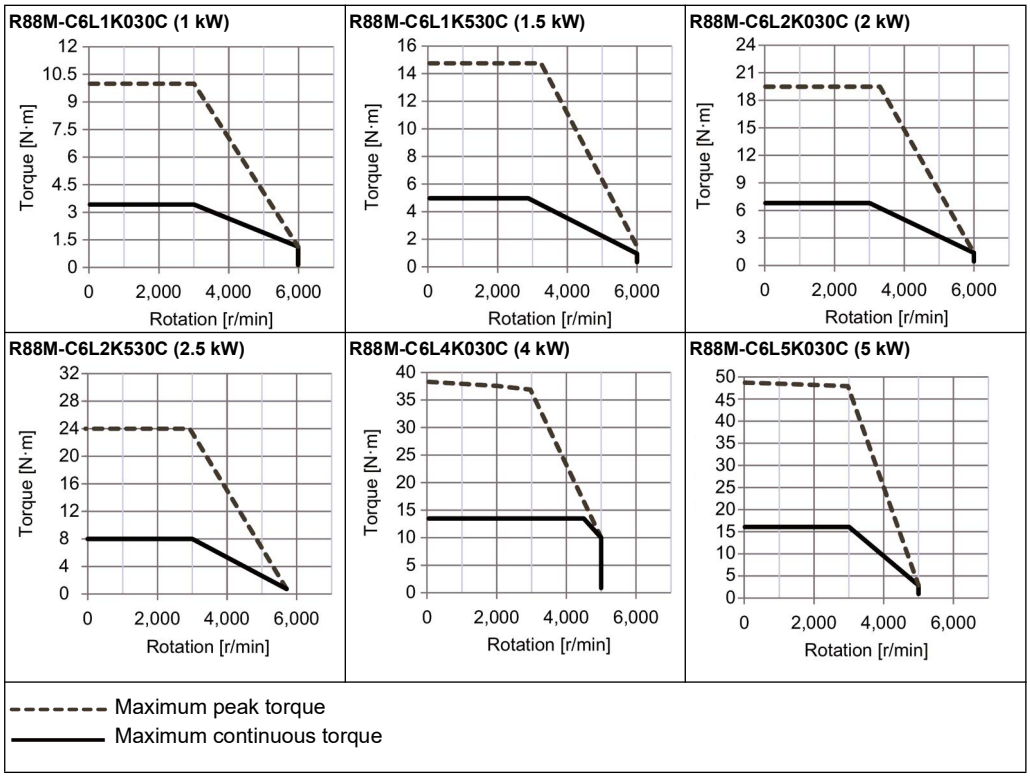

2000 rpm servo motors, 230 V

Ratings and specifications

Model				
Item		**Unit**	**R88M-C6M1K020T**	**R88M-C6M1K520T**
Rated voltage		**V**	230 VAC	
Rated output		**W**	1000	1500
Rated torque		**N m**	4.77	7.16
Rated rotation speed		**rpm**	2000	
Maximum rotation speed		**rpm**	3000	
Momentary maximum torque		**N·m**	14.3	21.5
Rated current		**A**	5.4	8.5
Momentary maximum current		**A**	16.9	26
Rotor inertia		**kg·m^2 Without brake**	13 × 10^{-4}	18.3× 10^{-4}
		kg·m^2 With brake	15.2 × 10^{-4}	20.5 × 10^{-4}
Recommended load-to-inertia ratio		**-**	≤5	
Torque constant		**N·m/A (rms)**	0.88	0.84
Allowable radial load		**N**	490	683
Allowable thrust load		**N**	196	343
Weight		**kg Without brake**	5.8	7
		kg With brake	7.9	9
Insulation class		**-**	F	
Degree of protection (excluding shaft-through section)		**-**	IP67	
Radiator plate dimensions (material)		**mm**	400×400×20 Iron	
Brake specifi-cations	**Moment of inertia**	**kg·m^2**	1.105 × 10^{-4}	
	Excitation voltage	**V**	24 VDC	
	Current consumption	**A**	0.8	
	Static friction torque	**N·m**	18 min.	
	Attraction time	**ms**	100 max.	
	Release time	**ms**	40 max.	
Flange		**mm**	130 × 130	

Torque-speed characteristics

R88M-C6M1K020T (1 kW)

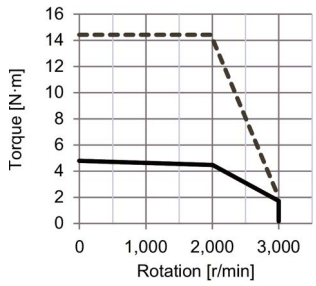

R88M-C6M1K520T (1.5 kW)

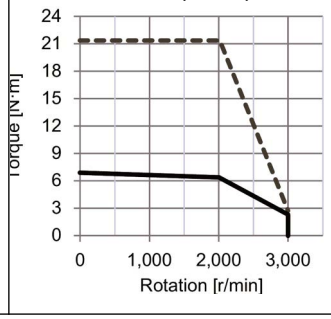

Maximum peak torque
Maximum continuous torque

2000 rpm servo motors, 400 V

Ratings and specifications

Model						
Item		**Unit**	**R88M-C6M1K020C**	**R88M-C6M1K520C**	**R88M-C6M2K020C**	**R88M-C6M3K020C**
Rated voltage		**V**	400 VAC			
Rated output		**W**	1000	1500	2000	3000
Rated torque		**N m**	4.77	7.16	9.55	14.3
Rated rotation speed		**rpm**	2000			
Maximum rotation speed		**rpm**	3000			
Momentary maximum torque		**N·m**	14.3	21.5	28.6	42.9
Rated current		**A**	3.3	5.1	6.5	10.5
Momentary maximum current		**A**	10	16	18.6	30
Rotor inertia		**kg·m^2 Without brake**	13×10^{-4}	18.3×10^{-4}	24.4×10^{-4}	36.4×10^{-4}
		kg·m^2 With brake	15.2×10^{-4}	20.5×10^{-4}	26.6×10^{-4}	38.6×10^{-4}
Recommended load-to-inertia ratio		**-**	≤5			
Torque constant		**N·m/A (rms)**	1.45	1.4	1.47	1.36
Allowable radial load		**N**	490	683	980	
Allowable thrust load		**N**	196	343	396	
Weight		**kg Without brake**	5.8	7	8.7	12.6
		kg With brake	7.9	9	10.8	14.3
Insulation class		**-**	F			
Degree of protection (excluding shaft-through section)		**-**	IP67			
Radiator plate dimensions (material)		**mm**	400×400×20 Iron			
Brake specifi-cations	**Moment of inertia**	**kg·m^2**	1.105×10^{-4}			0.8×10^{-4}
	Excitation voltage	**V**	24 VDC			
	Current consumption	**A**	0.8			
	Static friction torque	**N·m**	18 min.			
	Attraction time	**ms**	100 max.			
	Release time	**ms**	40 max.			
Flange		**mm**	130 × 130			

Torque-speed characteristics

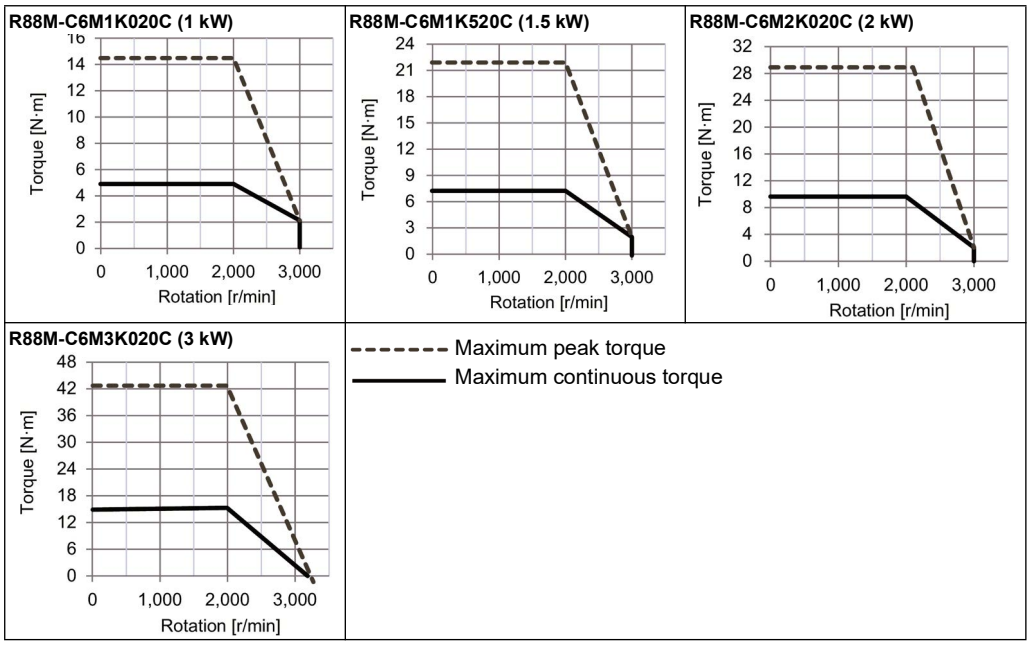

1500 rpm servo motors, 230 V

Ratings and specifications

Model				
Item		**Unit**	**R88M-C6H85015T**	**R88M-C6H1K315T**
Rated voltage		**V**	230 VAC	
Rated output		**W**	850	1300
Rated torque		**N m**	5.39	8.34
Rated rotation speed		**rpm**	1500	
Maximum rotation speed		**rpm**	3000	
Momentary maximum torque		**N·m**	16.2	25
Rated current		**A**	6	9.6
Momentary maximum current		**A**	19	29.6
Rotor inertia		**kg·m^2 Without brake**	13 × 10^{-4}	18.3 x 10^{-4}
		kg·m^2 With brake	15.2 × 10^{-4}	20.5 × 10^{-4}
Recommended load-to-inertia ratio		**-**	≤5	
Torque constant		**N·m/A (rms)**	0.9	0.87
Allowable radial load		**N**	490	683
Allowable thrust load		**N**	196	343
Weight		**kg Without brake**	5.8	7
		kg With brake	7.9	9
Insulation class		**-**	F	
Degree of protection (excluding shaft-through section)		**-**	IP67	
Radiator plate dimensions (material)		**mm**	400×400×20 Iron	
Brake specifi-cations	**Moment of inertia**	**kg·m^2**	1.105 × 10^{-4}	
	Excitation voltage	**V**	24 VDC	
	Current consumption	**A**	0.8	
	Static friction torque	**N·m**	18 min.	
	Attraction time	**ms**	100 max.	
	Release time	**ms**	40 max.	
Flange		**mm**	130 × 130	

Torque-speed characteristics

R88M-C6H85015T (850 W)

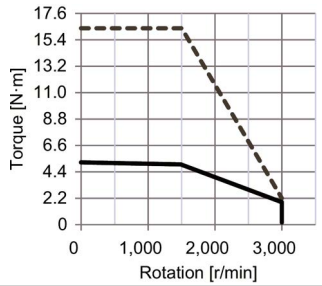

R88M-C6H1K315T (1.3 kW)

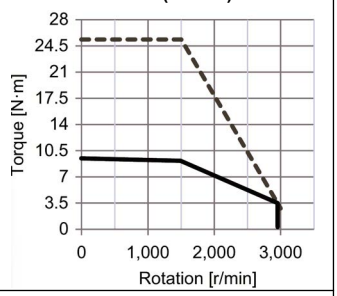

- - - - - - Maximum peak torque
——— Maximum continuous torque

1500 rpm servo motors, 400 V

Ratings and specifications

Model								
Item		**Unit**	**R88M-C6H85015C**	**R88M-C6H1K315C**	**R88M-C6H1K815C**	**R88M-C6H2K915C**	**R88M-C6H4K415C**	**R88M-C6H5K515C**	**R88M-C6H7K515**
Rated voltage		**V**	400 VAC						
Rated output		**W**	850	1300	1800	2900	4400	5500	7500
Rated torque		**N m**	5.39	8.34	11.5	18.5	28	35	48
Rated rotation speed		**rpm**	1500						
Maximum rotation speed		**rpm**	3000						
Momentary maximum torque		**N·m**	16.2	25	34.5	55.5	84	105	120
Rated current		**A**	3.6	5.8	8.1	10.5	15.5	19.5	25.6
Momentary maximum current		**A**	11	17.5	23.2	35.5	55.2	65.5	66.5
Rotor inertia		**kg·m^2 Without brake**	13×10^{-4}	18.3×10^{-4}	24.4×10^{-4}	5×10^{-3}	6.7×10^{-3}	8×10^{-3}	13.8×10^{-3}
		kg·m^2 With brake	15.2×10^{-4}	20.5×10^{-4}	26.6×10^{-4}	5.6×10^{-3}	7.3×10^{-3}	8.6×10^{-3}	14.4×10^{-3}
Recommended load-to-inertia ratio		**-**	≤5						
Torque constant		**N·m/A (rms)**	1.5	1.44	1.42	1.8	1.68	1.8	1.88
Allowable radial load		**N**	490	683	980	1470	1470	1764	1764
Allowable thrust load		**N**	196	343	396	490		588	
Weight		**kg Without brake**	5.8	7	8.7	14.3	17.5	20.5	30.5
		kg With brake	7.9	9	10.8	19	22.2	25.1	34.9
Insulation class		**-**	F						
Degree of protection (excluding shaft-through section)		**-**	IP67						
Radiator plate dimensions (material)		**mm**	400×400×20 Iron			550×550×30 Iron			
Brake specifi-cations	**Moment of inertia**	**kg·m^2**	1.105×10^{-4}			4.38×10^{-4}			
	Excitation voltage	**V**	24 VDC						
	Current consumption	**A**	0.8			2.1			
	Static friction torque	**N·m**	18 min.			50 min.			
	Attraction time	**ms**	100 max.			200 max.			
	Release time	**ms**	40 max.			80 max.			
Flange		**mm**	130 × 130			180 × 180			

Torque-speed characteristics

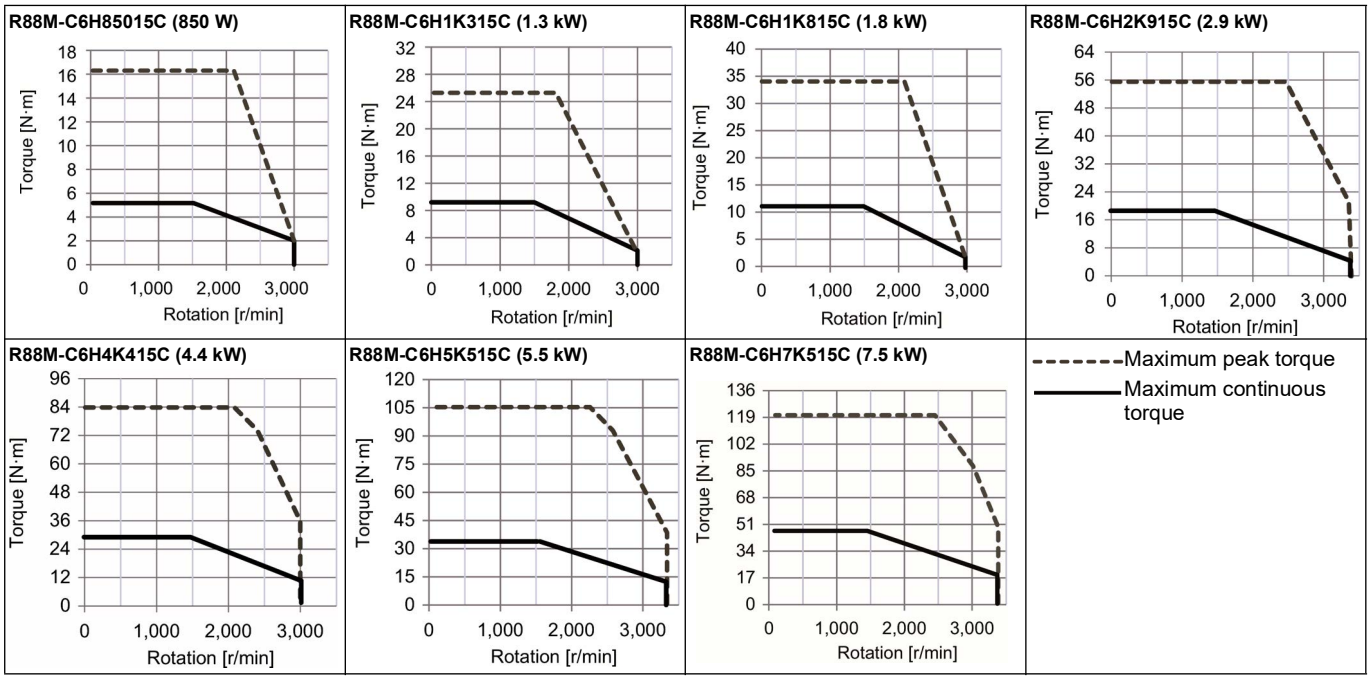

Names

R88D-C6N02/04H-ECT-GS (230 V, 200 W to 400 W models)

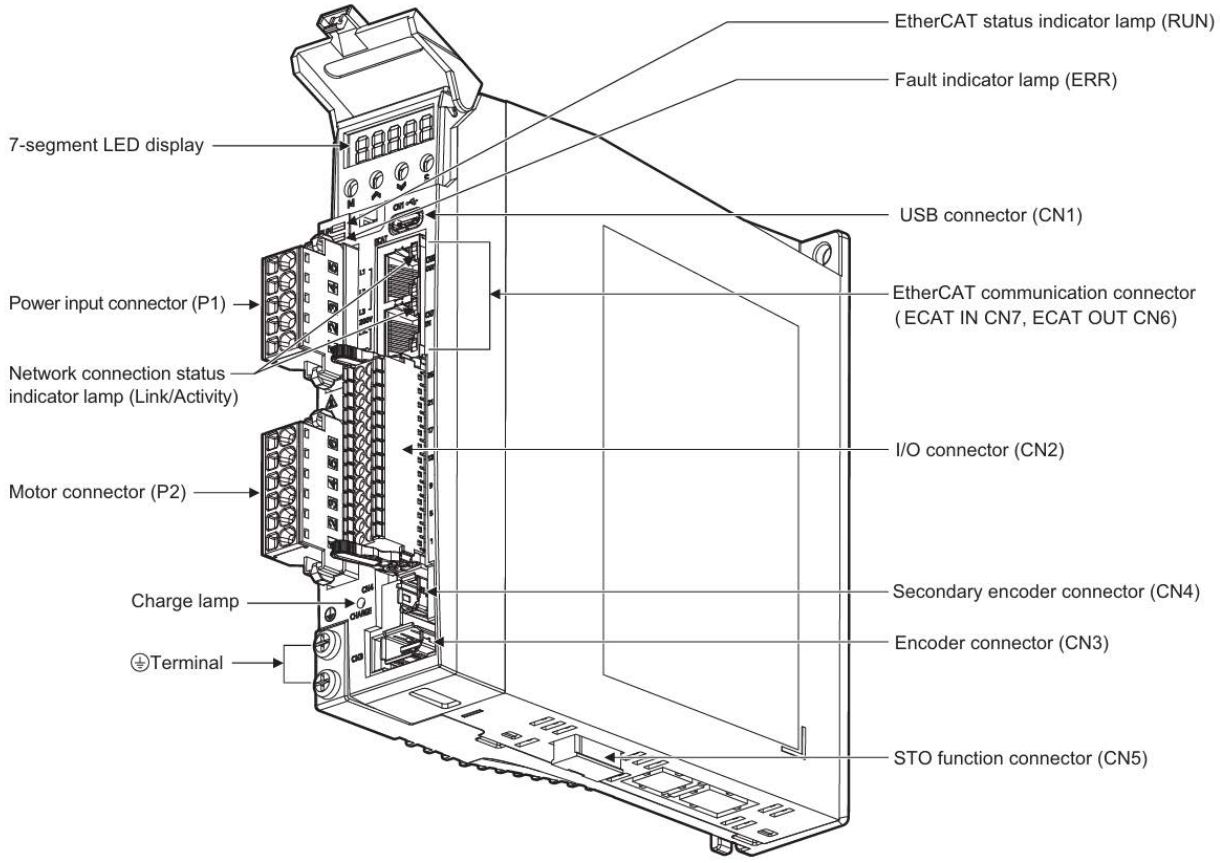

R88D-C6N08H-ECT-GS (230 V, 750 W model)

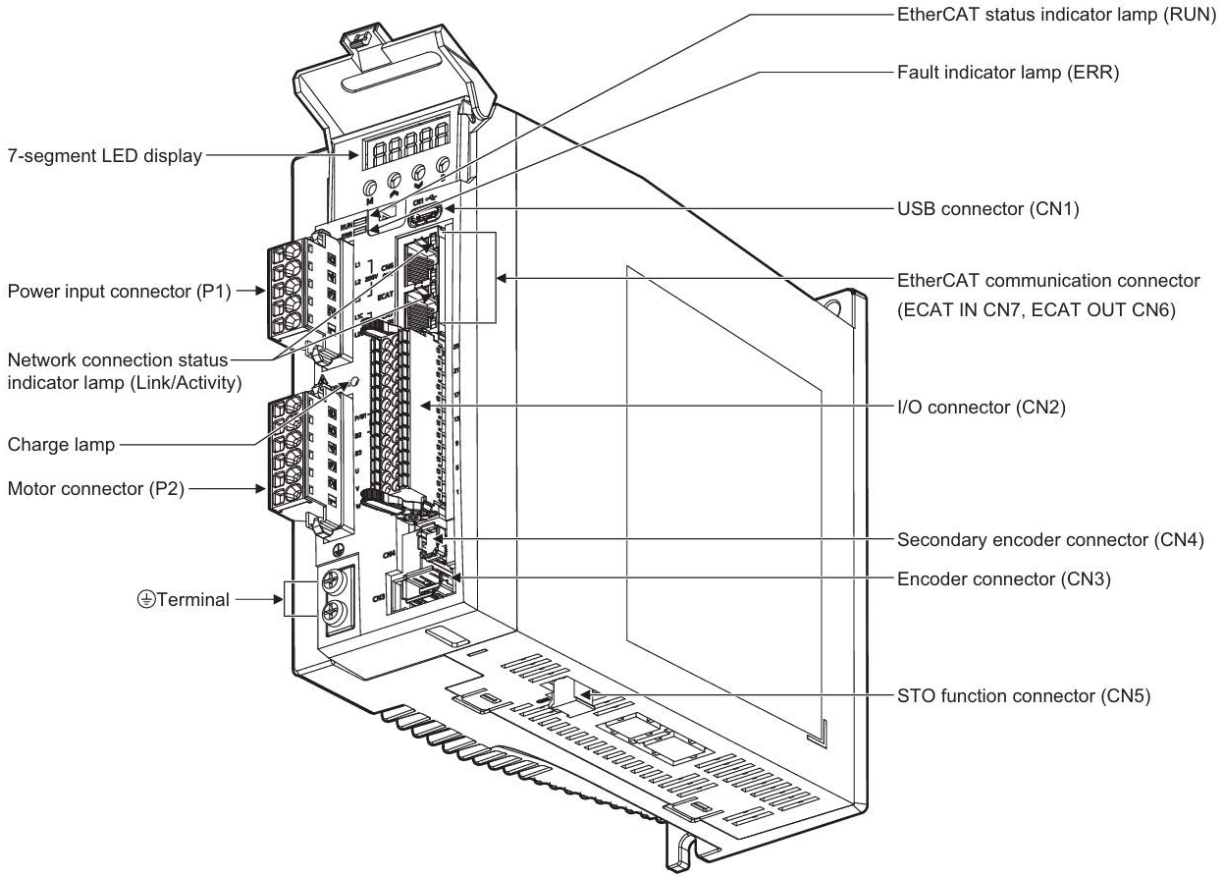

R88D-C6N10/15H-ECT-GS (230 V, 1 kW to 1.5 kW models)
R88D-C6N15/30F-ECT-GS (400 V, 1.5 to 3 kW models)

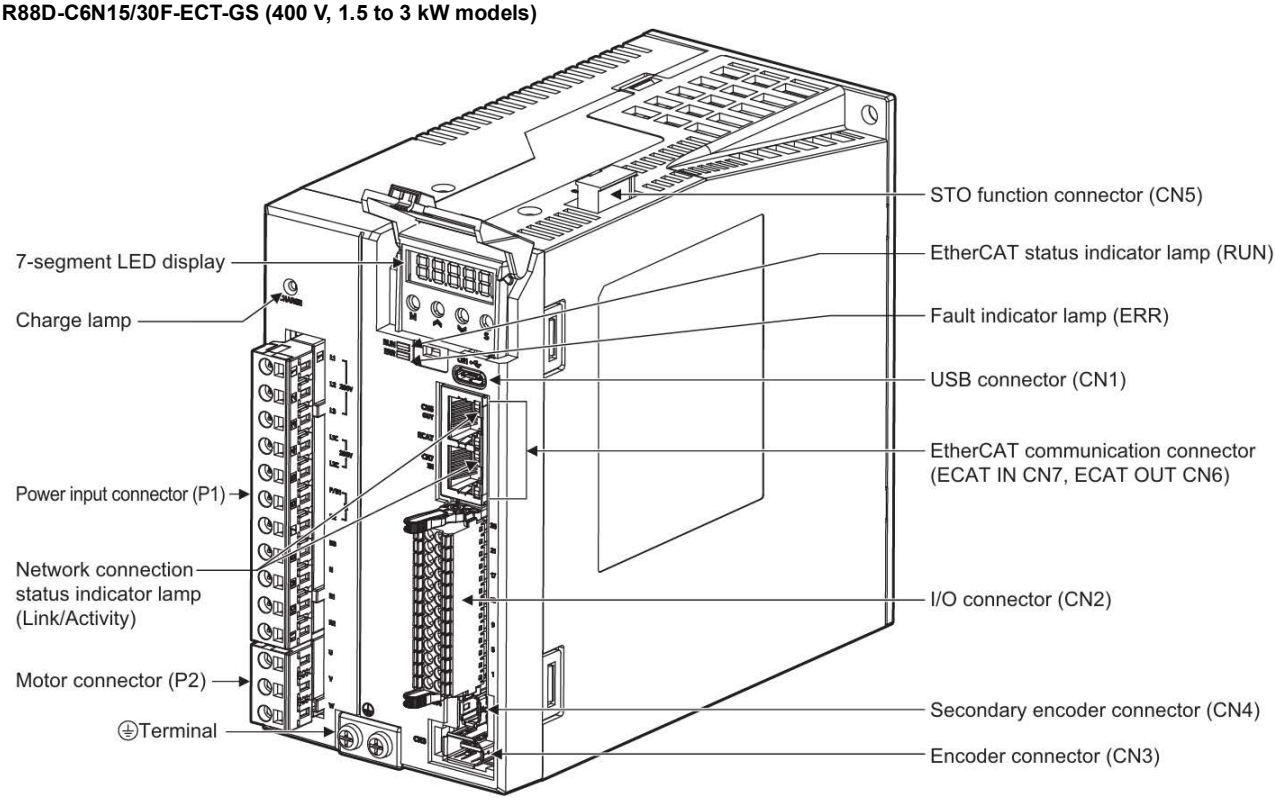

R88D-C6N50/60/75F-ECT-GS (400 V, 5 kW to 7.5 kW models)

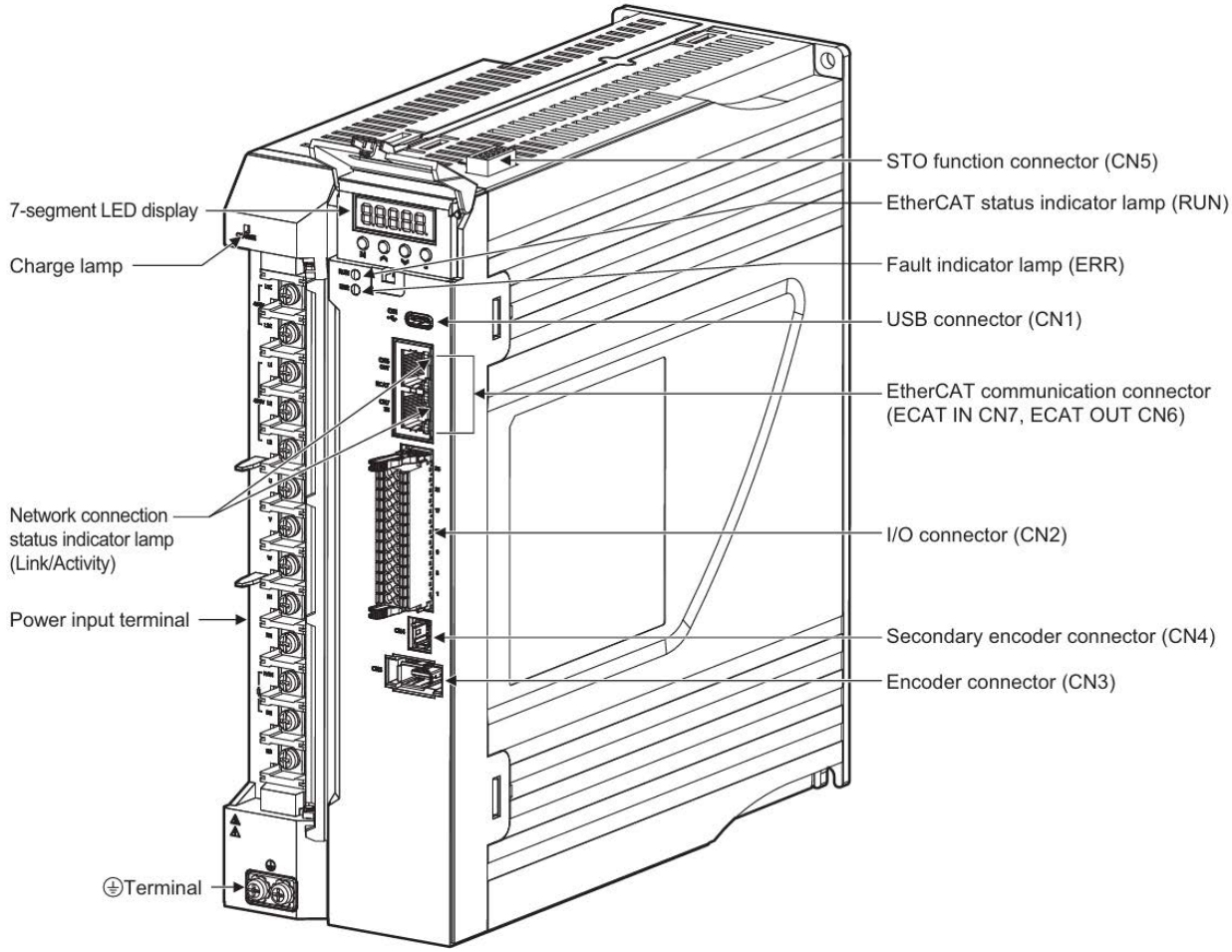

Dimensions

C6 servo drive

R88D-C6N02H-ECT-GS (230 V, 200 W model)

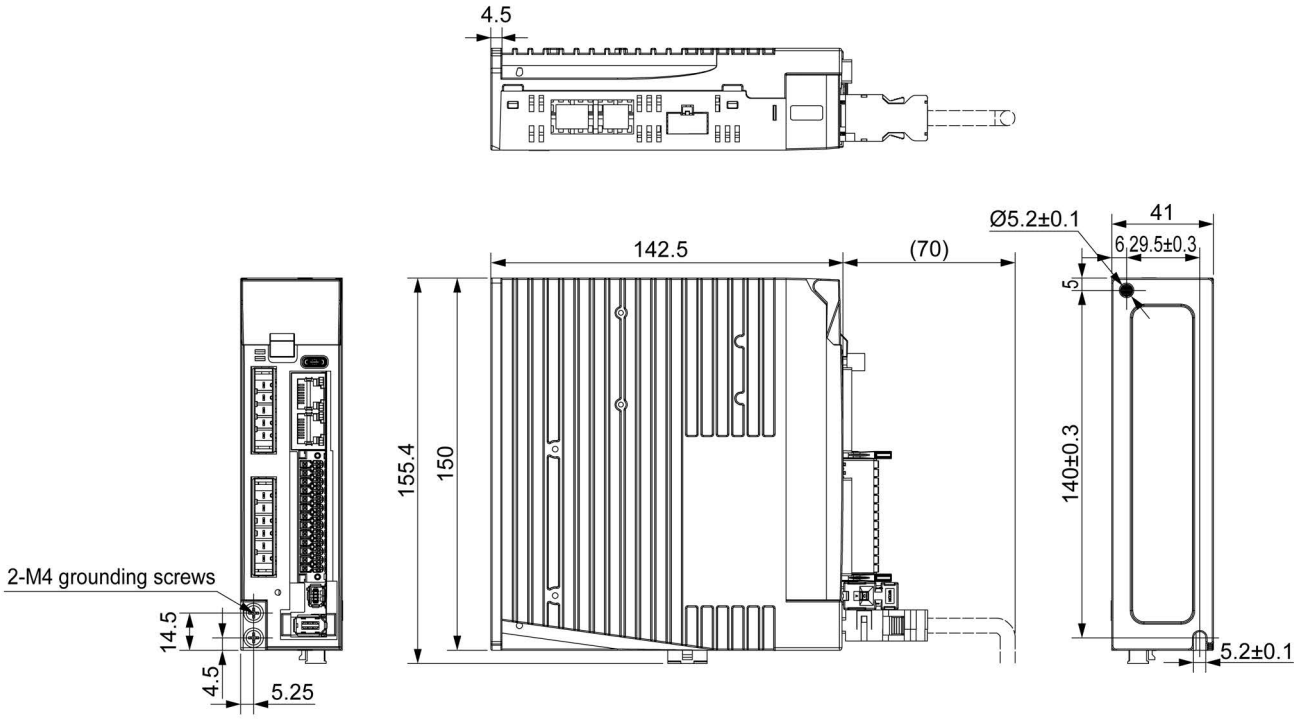

R88D-C6N04H-ECT-GS (230 V, 400 W model)

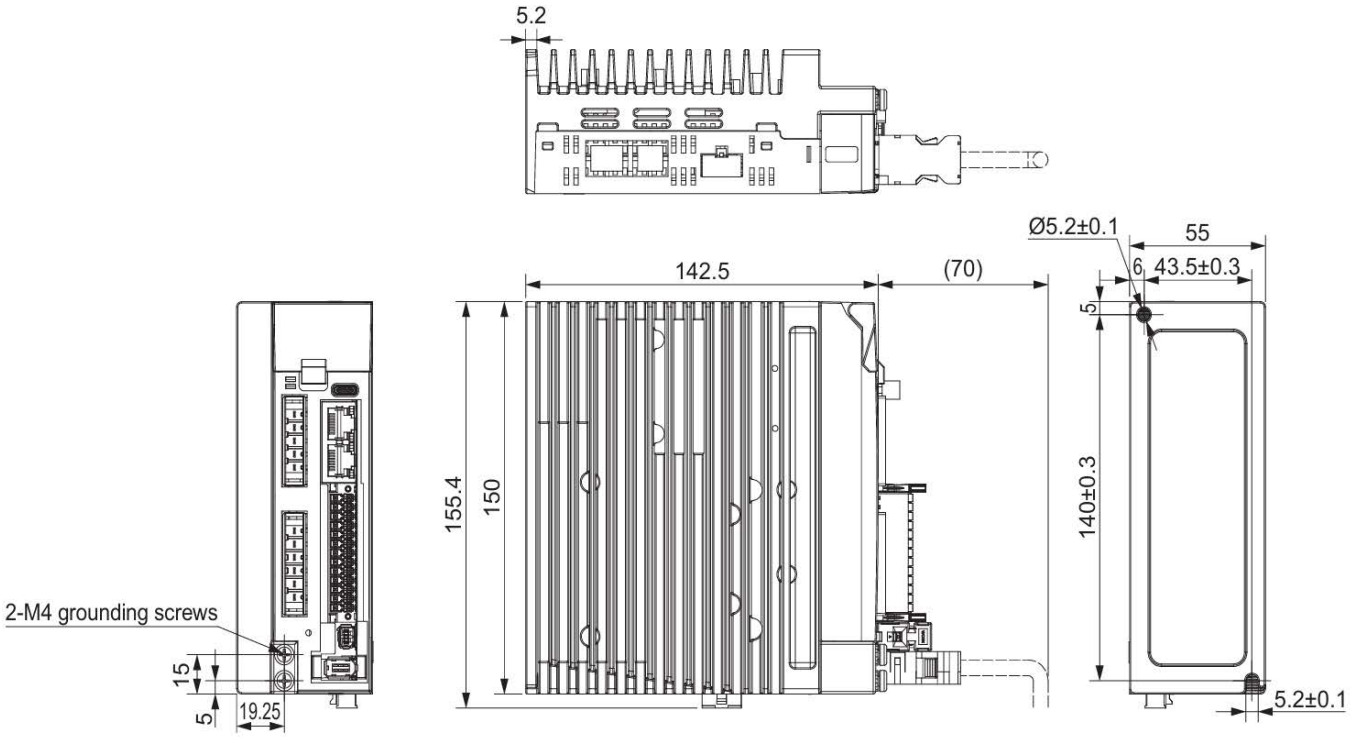

R88D-C6N08H-ECT-GS (230 V, 750 W model)

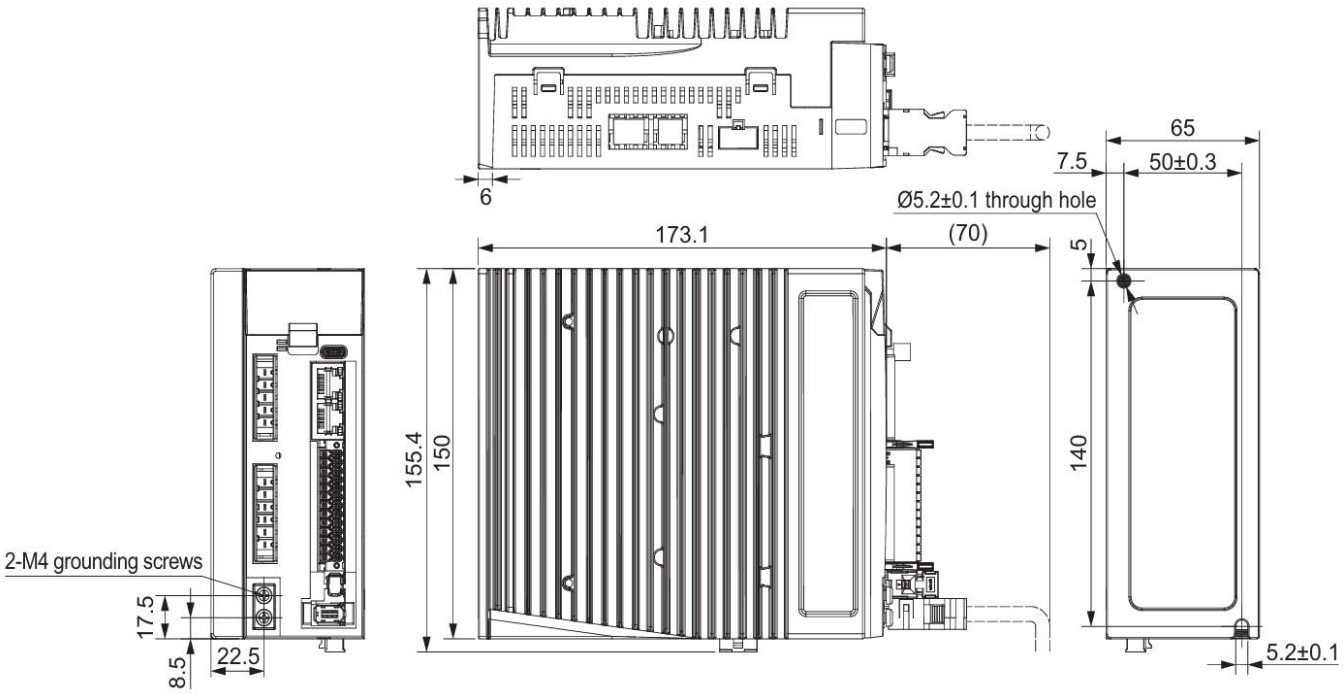

R88D-C6N10/15H-ECT-GS (230 V, 1 kW to 1.5 kW models)
R88D-C6N15/30F-ECT-GS (400 V, 1.5 to 3 kW models)

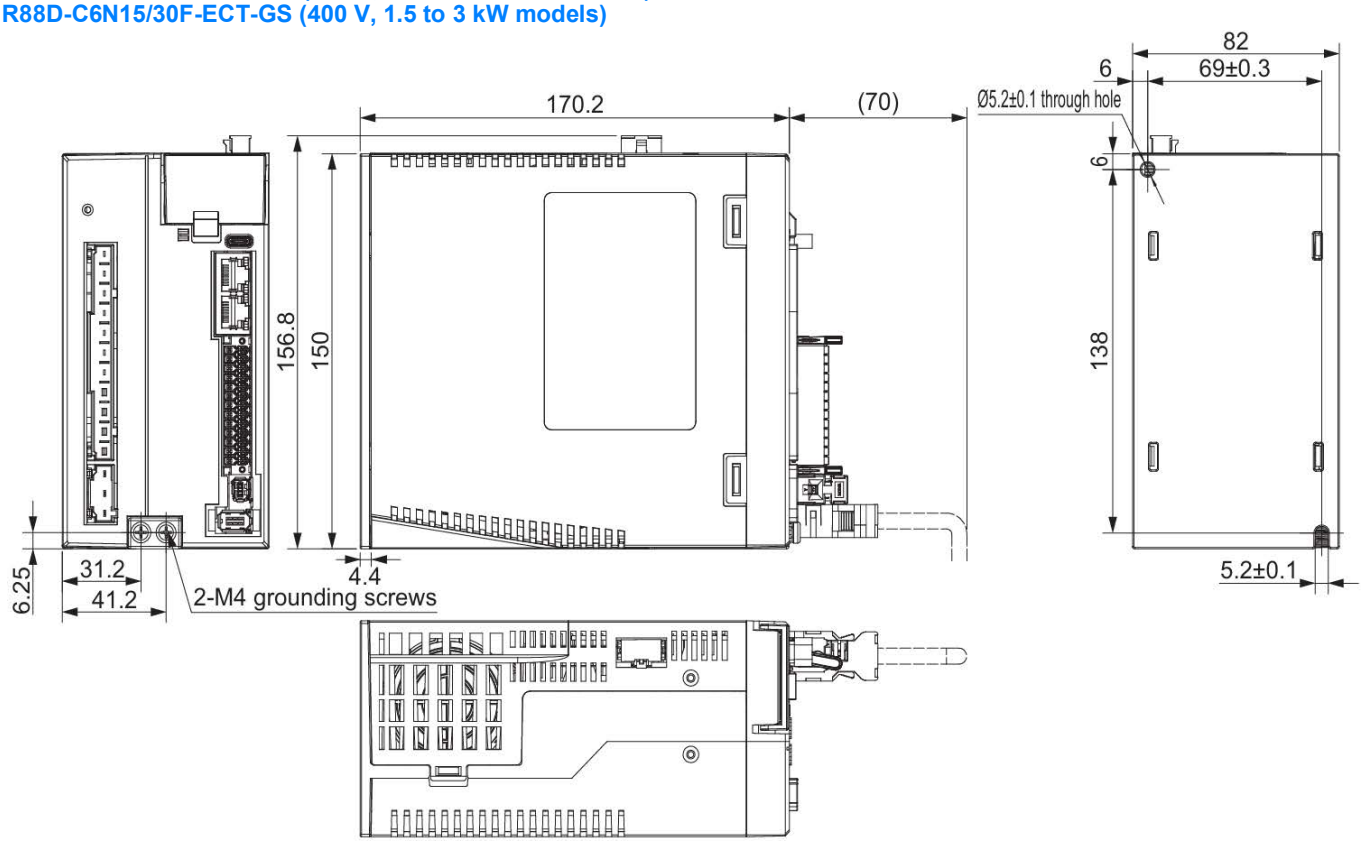

R88D-C6N50/60/75F-ECT-GS (400 V, 5 kW to 7.5 kW models)

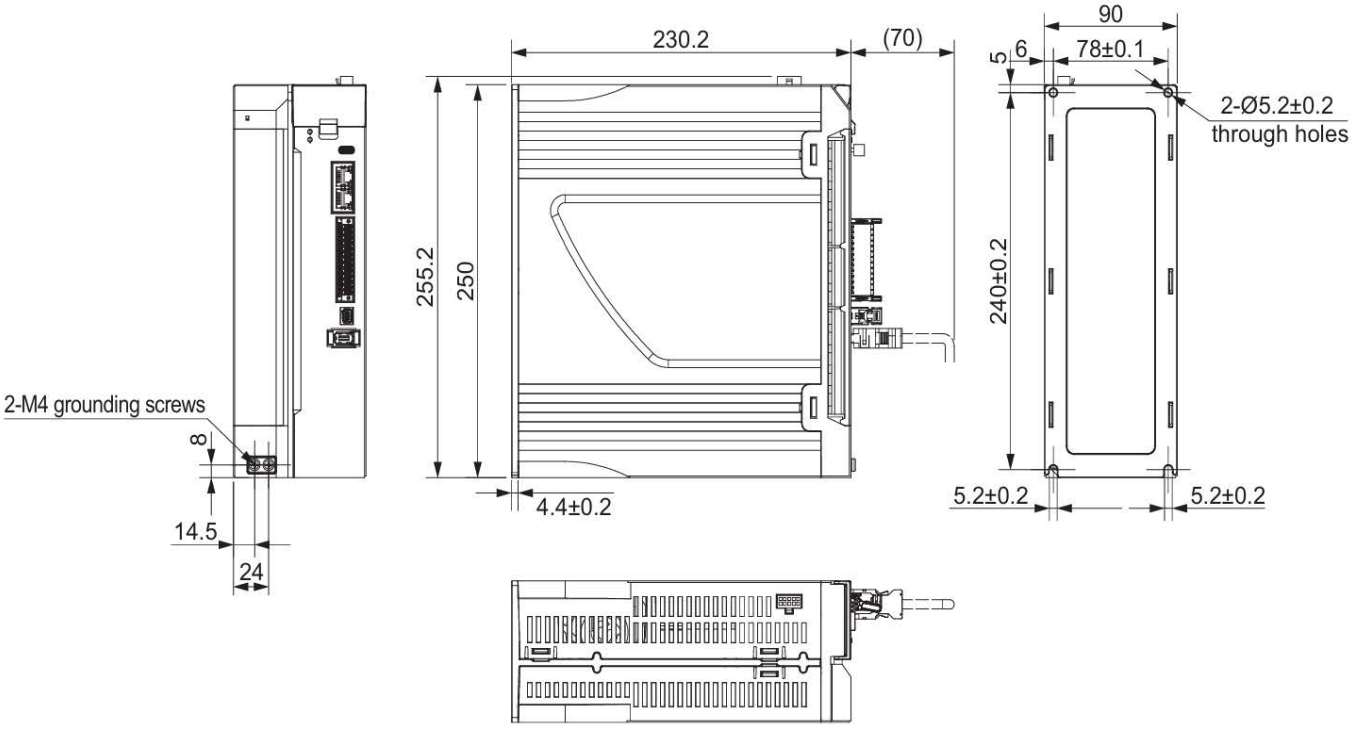

Filters

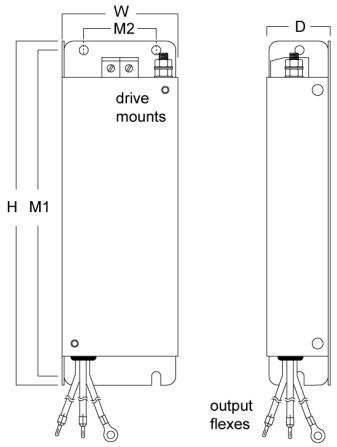

Filter model	External dimensions			Mount dimensions	
	H	W	D	M1	M2
R88A-FIC6103-SE	187.6	42	42	178.5	33
R88A-FIC6104-SE	191	56	41.8	181	42
R88A-FIC6107-SE	185	65	45	170	42
R88A-FIC6114-SE	183.5	82	42	173.5	60
R88A-FIC6308-SE	185	82	65	172.5	60
R88A-FIC6321-SE	288	90	90	275	65

C6 servo motor

3000 rpm motors (230 V, 50 W to 100 W)

Without brake

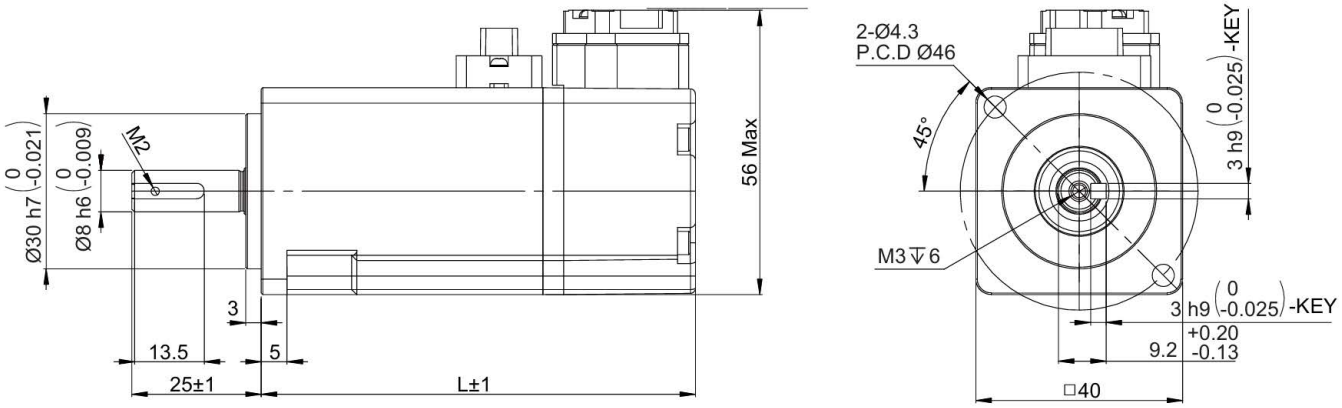

Model without brake	L
R88M-C6H05030T-S2-GS/OS2-GS	70
R88M-C6H10030T-S2-GS/OS2-GS	84

With brake

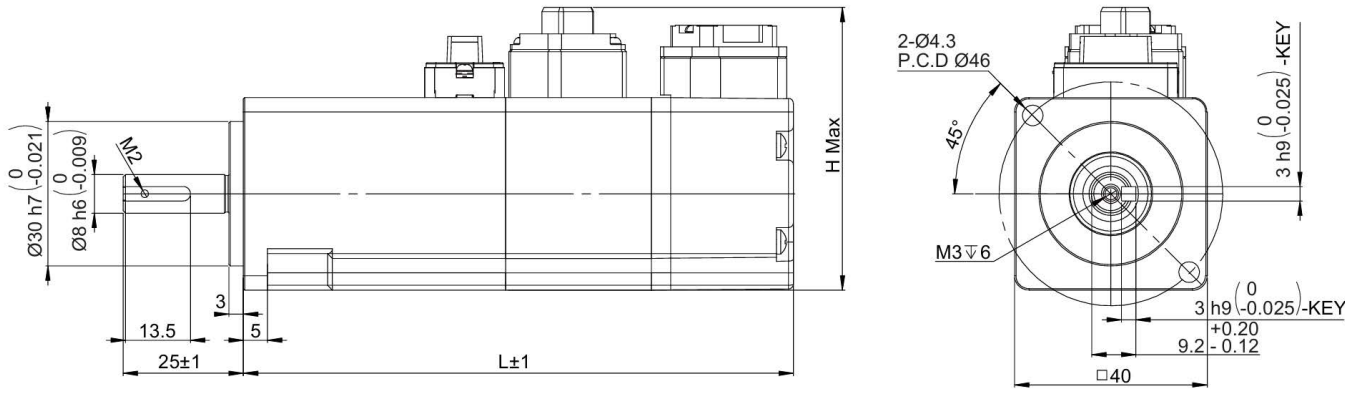

Model with brake	L	
R88M-C6H05030T-BS2-GS/BOS2-GS	100.3	59.7
R88M-C6H10030T-BS2-GS/BOS2-GS	106.3	57.7

3000 rpm motors (230 V, 200 W to 400 W)

Without brake

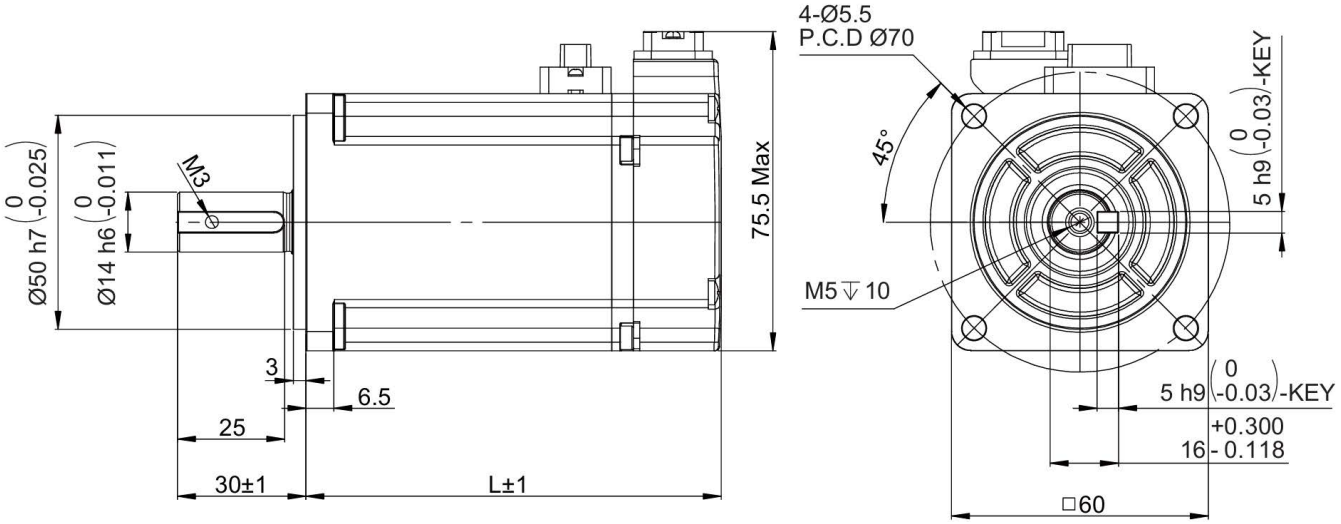

Model without brake	L
R88M-C6H20030T-S2-GS/OS2-GS	77
R88M-C6H40030T-S2-GS/OS2-GS	97

With brake

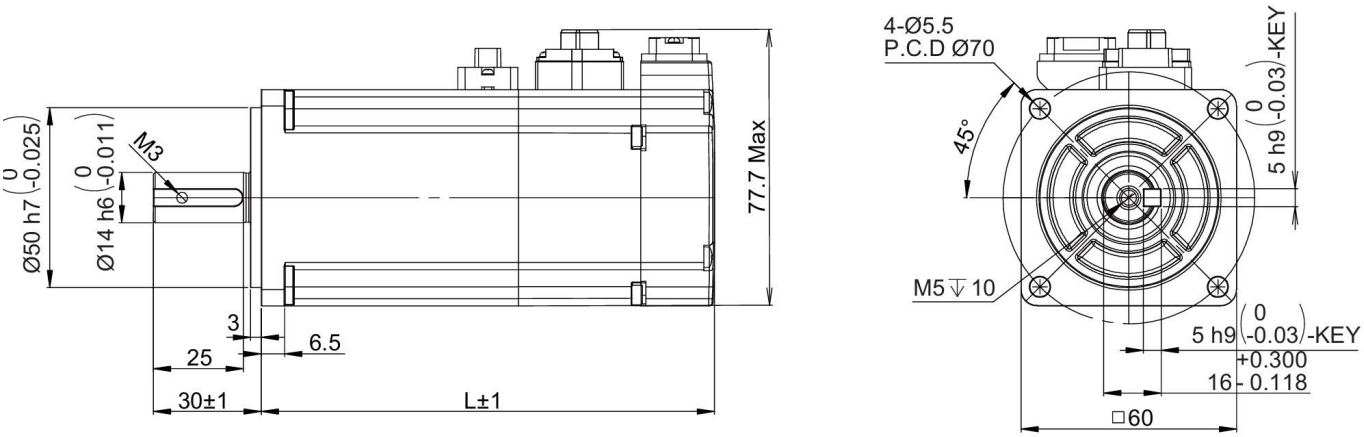

Model with brake	L
R88M-C6H20030T-BS2-GS/BOS2-GS	106
R88M-C6H40030T-BS2-GS/BOS2-GS	126

3000 rpm motors (230 V, 750 W to 1 kW)

Without brake

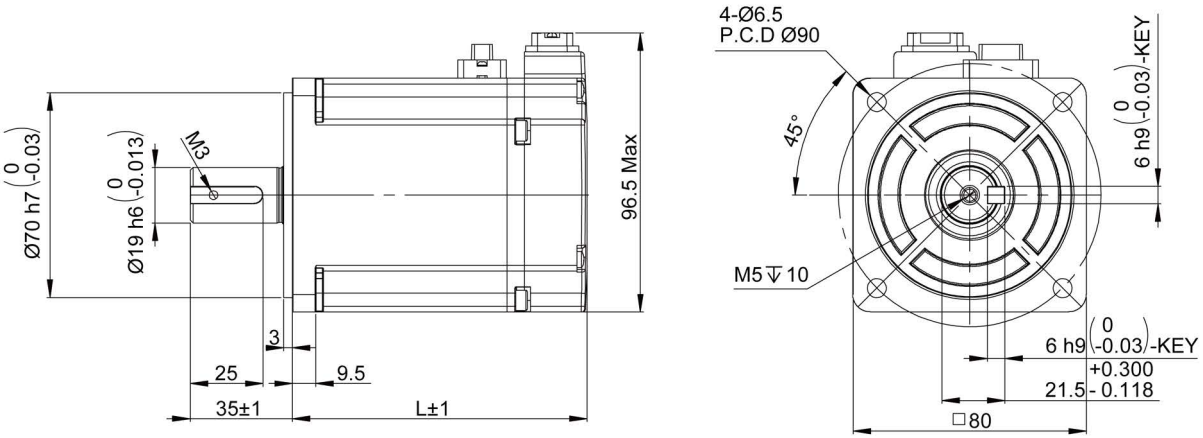

Model without brake	L
R88M-C6H75030T-S2-GS/OS2-GS	101
R88M-C6H1K030T-S2-GS/OS2-GS	114

With brake

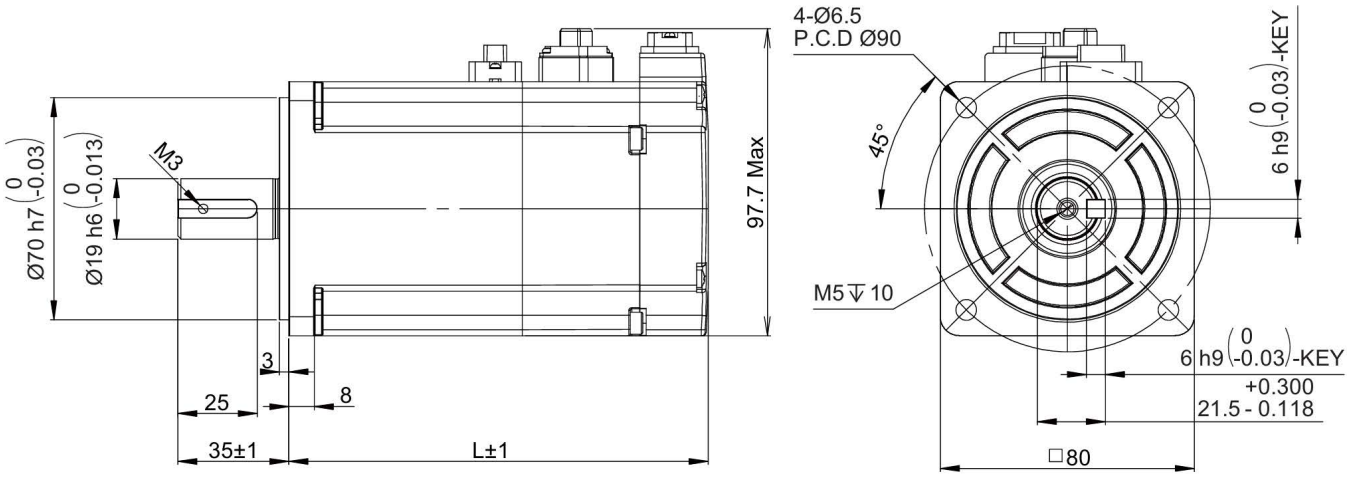

Model with brake	L
R88M-C6H75030T-BS2-GS/BOS2-GS	132
R88M-C6H1K030T-BS2-GS/BOS2-GS	145

3000 rpm motors (230 V, 1 kW to 1.5 kW)

Without brake

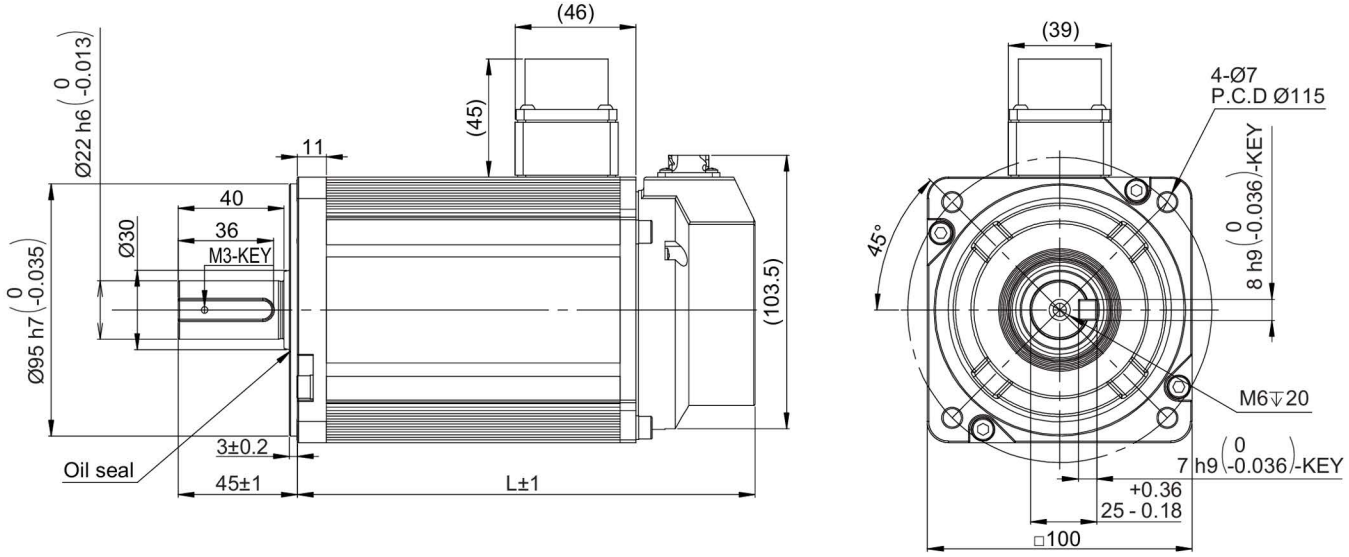

Model without brake	L
R88M-C6L1K030T-OS2-10GS	142
R88M-C6L1K530T-OS2-GS	157

With brake

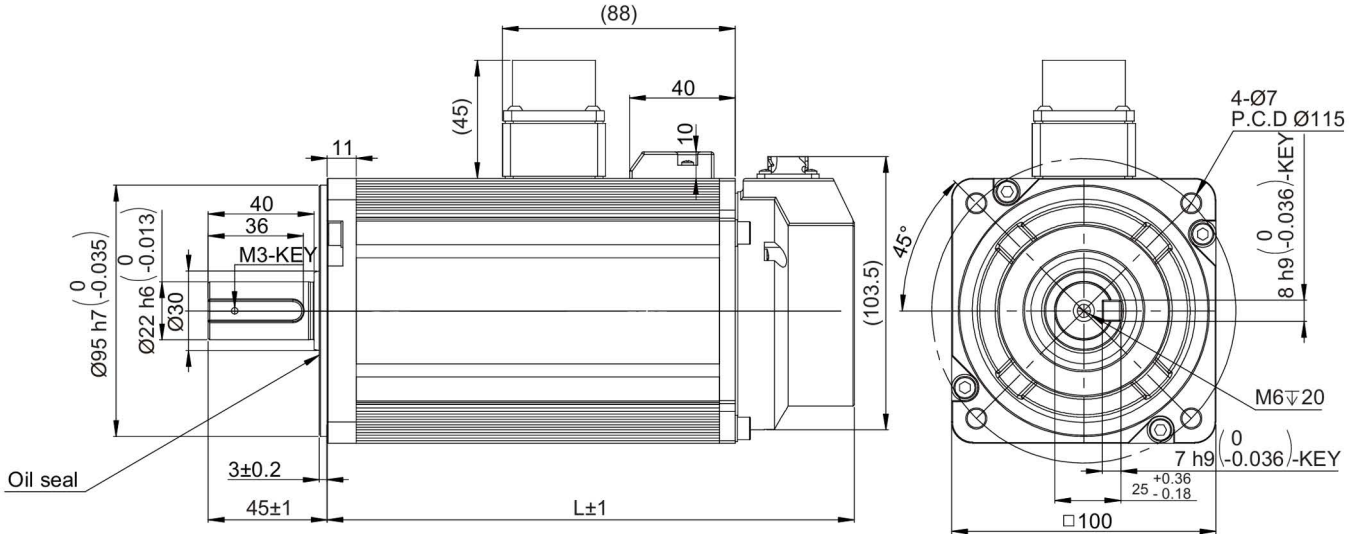

Model with brake	L
R88M-C6L1K030T-BOS2-10GS	184.4
R88M-C6L1K530T-BOS2-GS	199.4

3000 rpm motors (400 V, 1 kW to 2.5 kW)

Without brake

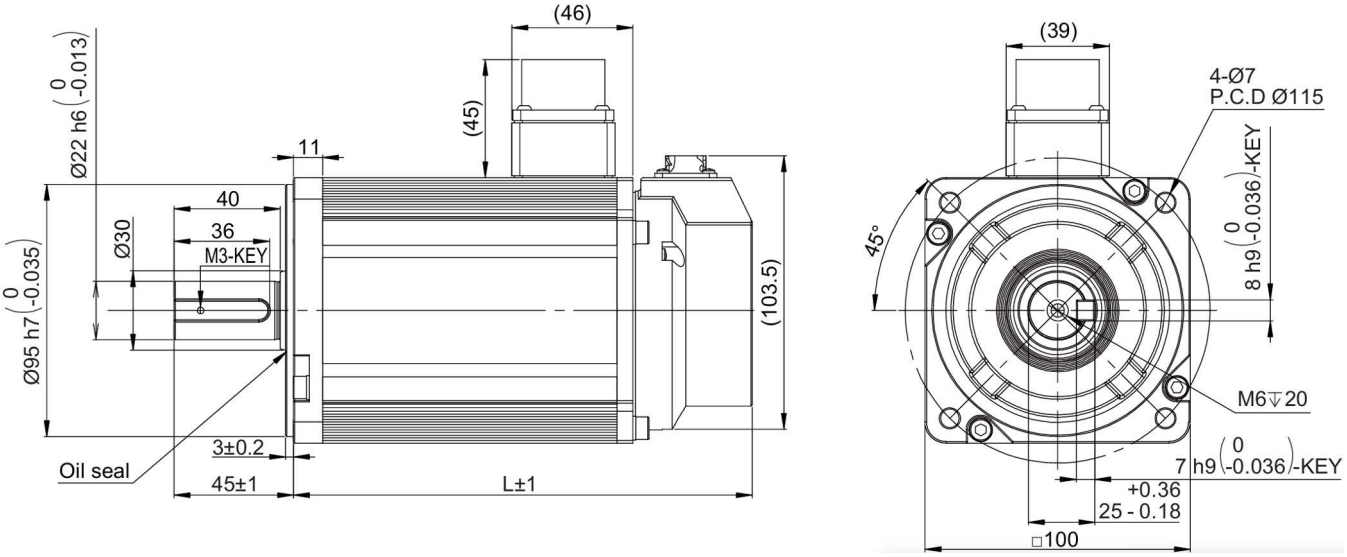

Model without brake	L
R88M-C6L1K030C-OS2-GS	142
R88M-C6L1K530C-OS2-GS	157
R88M-C6L2K030C-OS2-GS	173
R88M-C6L2K530C-OS2-GS	191

With brake

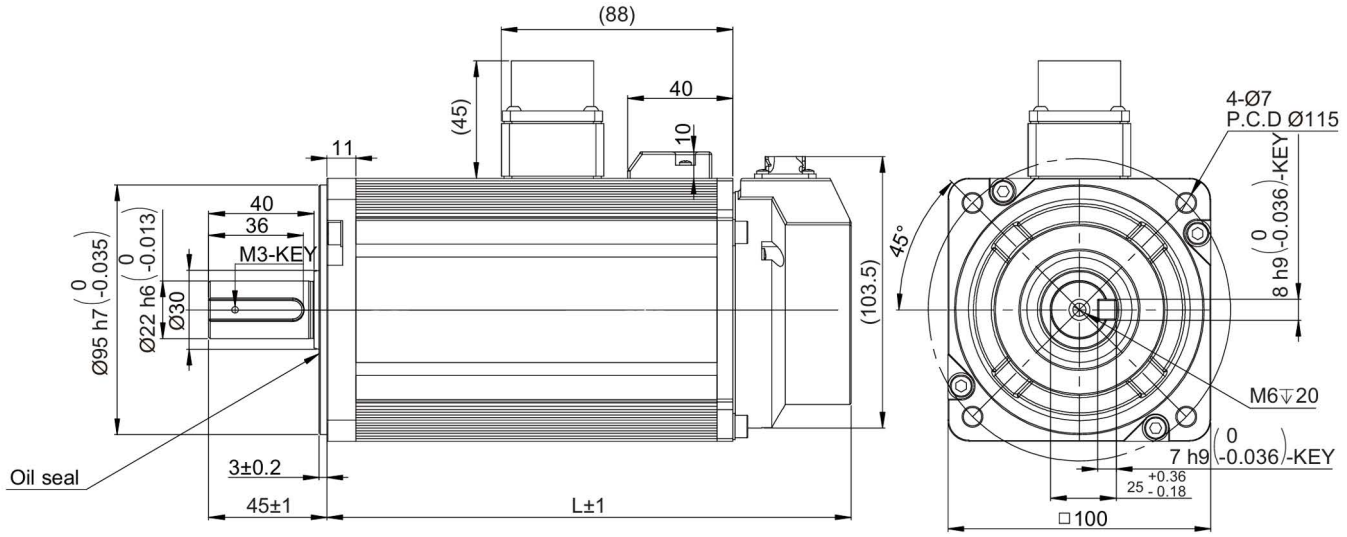

Model with brake	L
R88M-C6L1K030C-BOS2-GS	184.4
R88M-C6L1K530C-BOS2-GS	199.4
R88M-C6L2K030C-BOS2-GS	215.4
R88M-C6L2K530C-BOS2-GS	233.4

3000 rpm motors (400 V, 4 kW to 5 kW)

Without brake

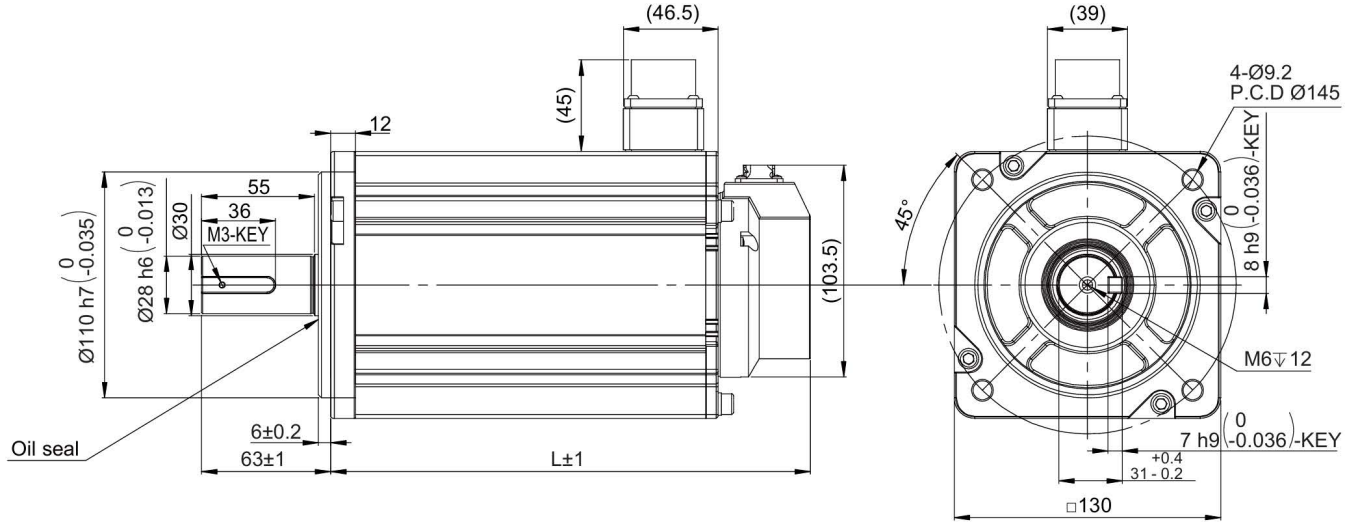

Model without brake	L
R88M-C6L4K030C-OS2-GS	234
R88M-C6L5K030C-OS2-GS	294

With brake

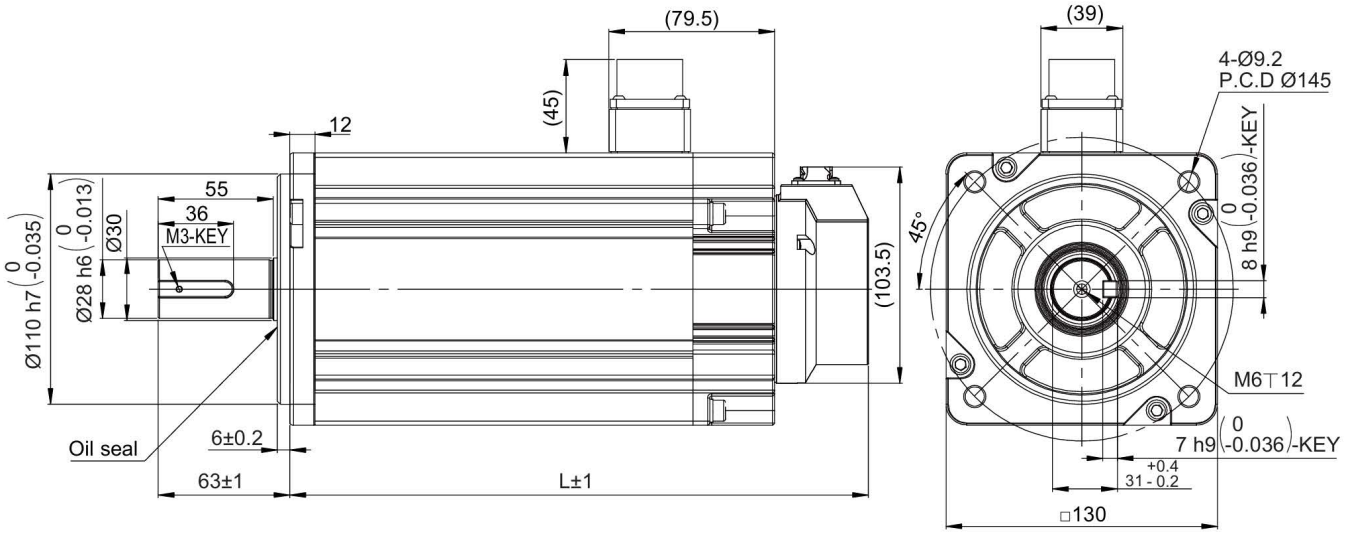

Model with brake	L
R88M-C6L4K030C-BOS2-GS	277
R88M-C6L5K030C-BOS2-GS	337

2000 rpm motors (230 V, 1 kW to 1.5 kW)

Without brake

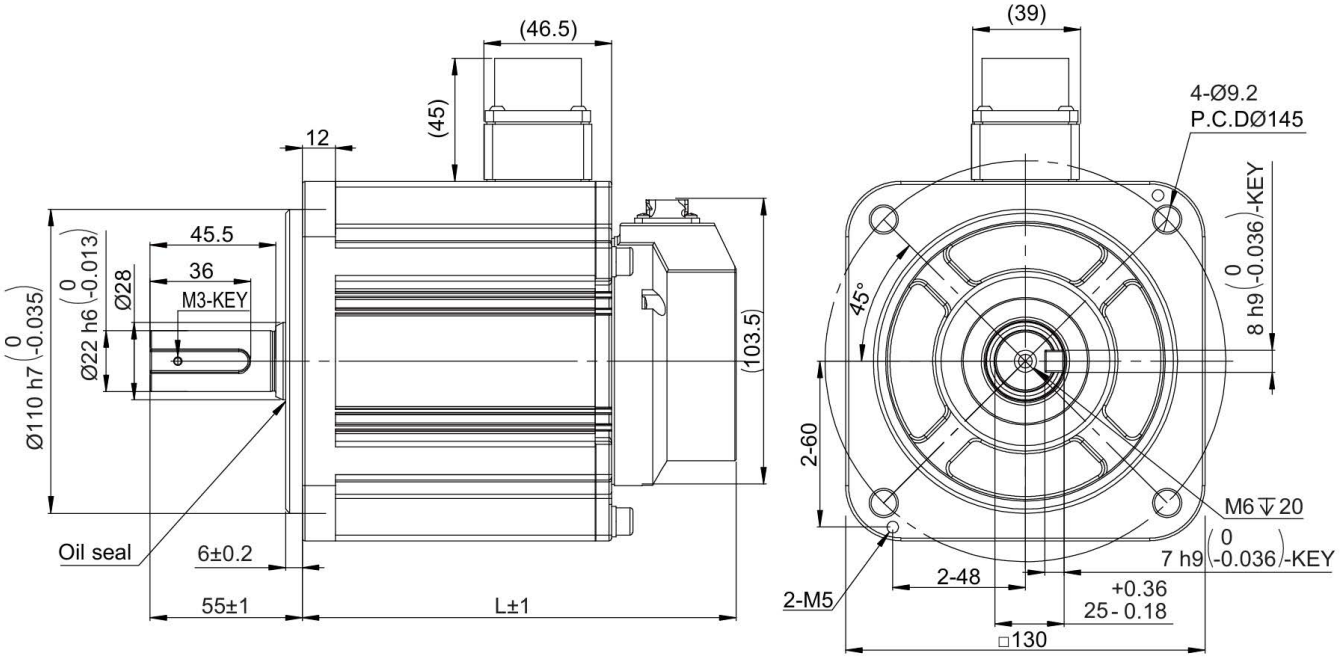

Model without brake	L
R88M-C6M1K020T-OS2-GS	143
R88M-C6M1K520T-OS2-GS	157

With brake

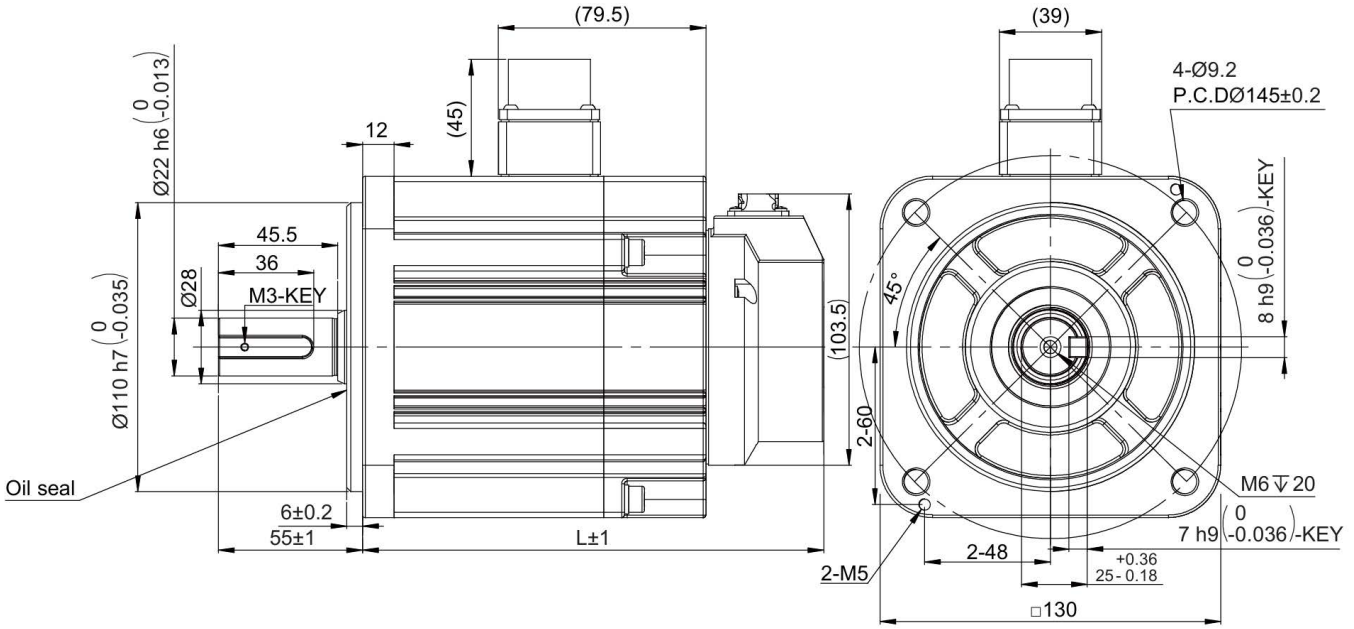

Model with brake	L
R88M-C6M1K020T-BOS2-GS	176
R88M-C6M1K520T-BOS2-GS	190

2000 rpm motors (400 V, 1 kW to 2 kW)

Without brake

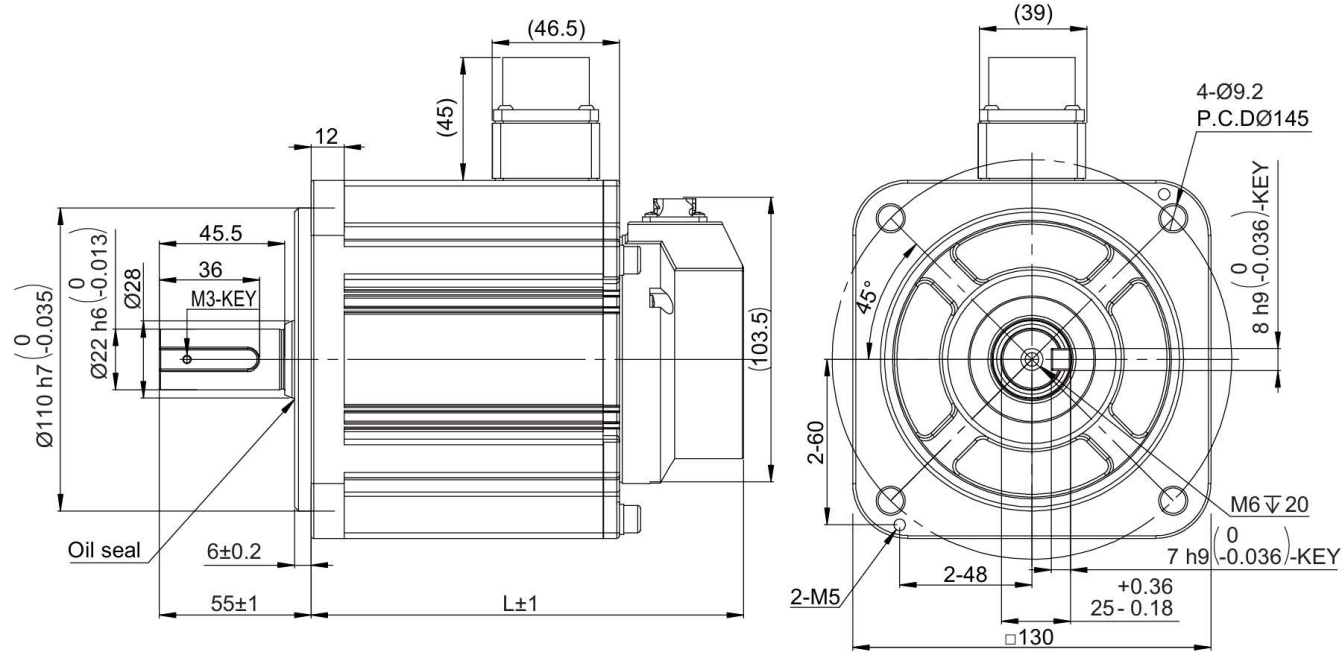

Model without brake	L
R88M-C6M1K020C-OS2-GS	143
R88M-C6M1K520C-OS2-GS	157
R88M-C6M2K020C-OS2-GS	174

With brake

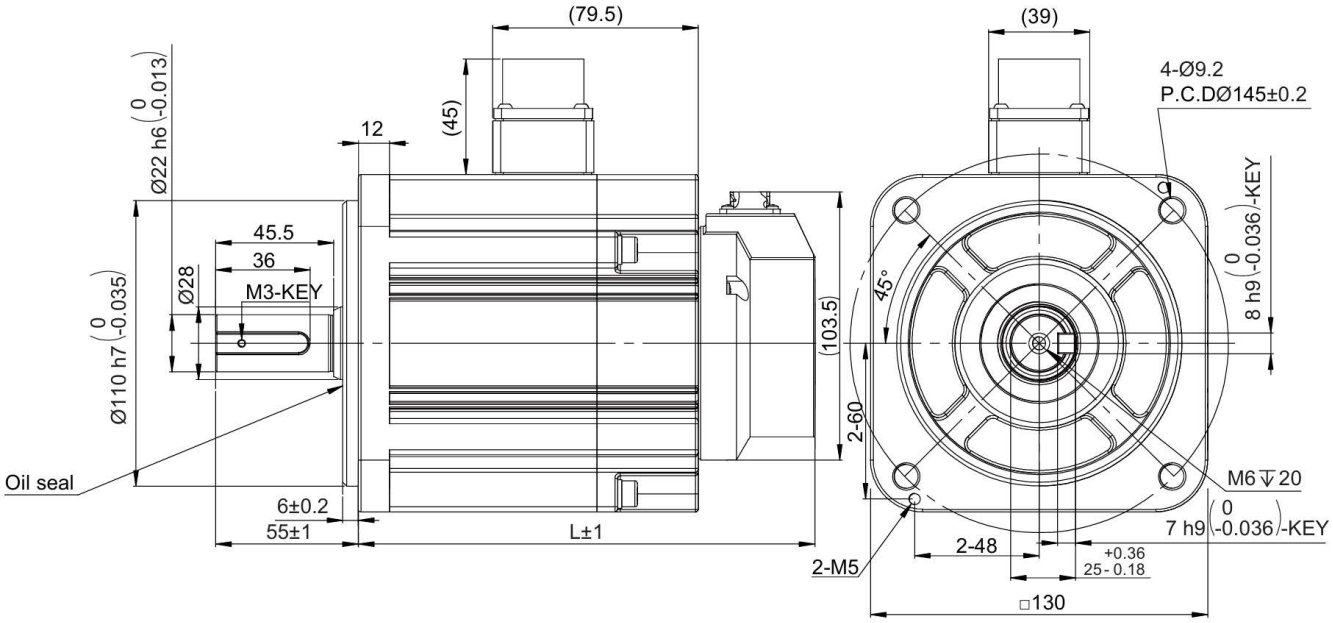

Model with brake	L
R88M-C6M1K020C-BOS2-GS	176
R88M-C6M1K520C-BOS2-GS	190
R88M-C6M2K020C-BOS2-GS	207

2000 rpm motors (400 V, 3 kW)

Without brake

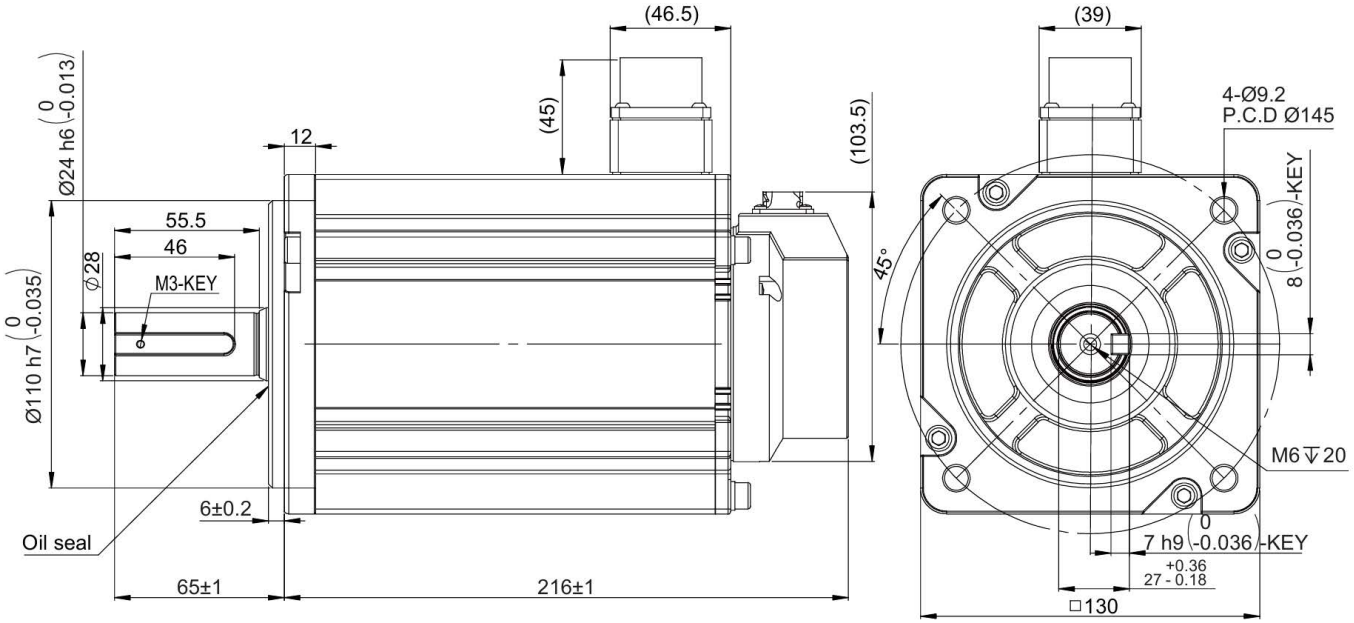

Model without brake
R88M-C6M3K020C-OS2-GS

With brake

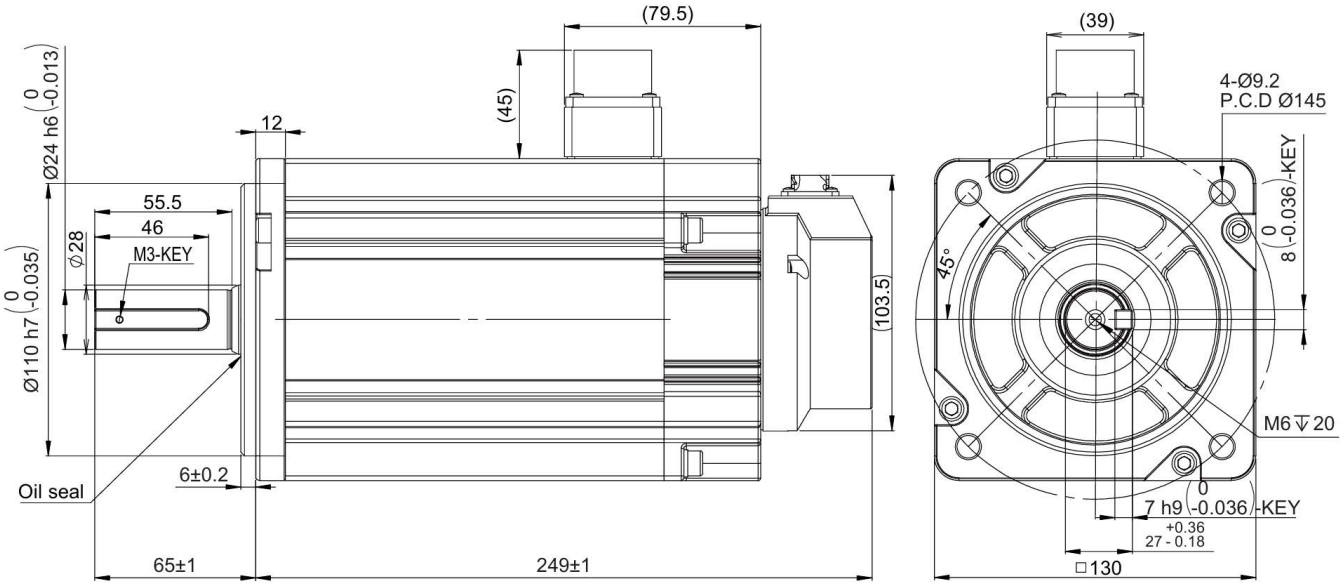

Model with brake
R88M-C6M3K020C-BOS2-GS

1500 rpm motors (230 V, 850 W to 1.3 kW)

Without brake

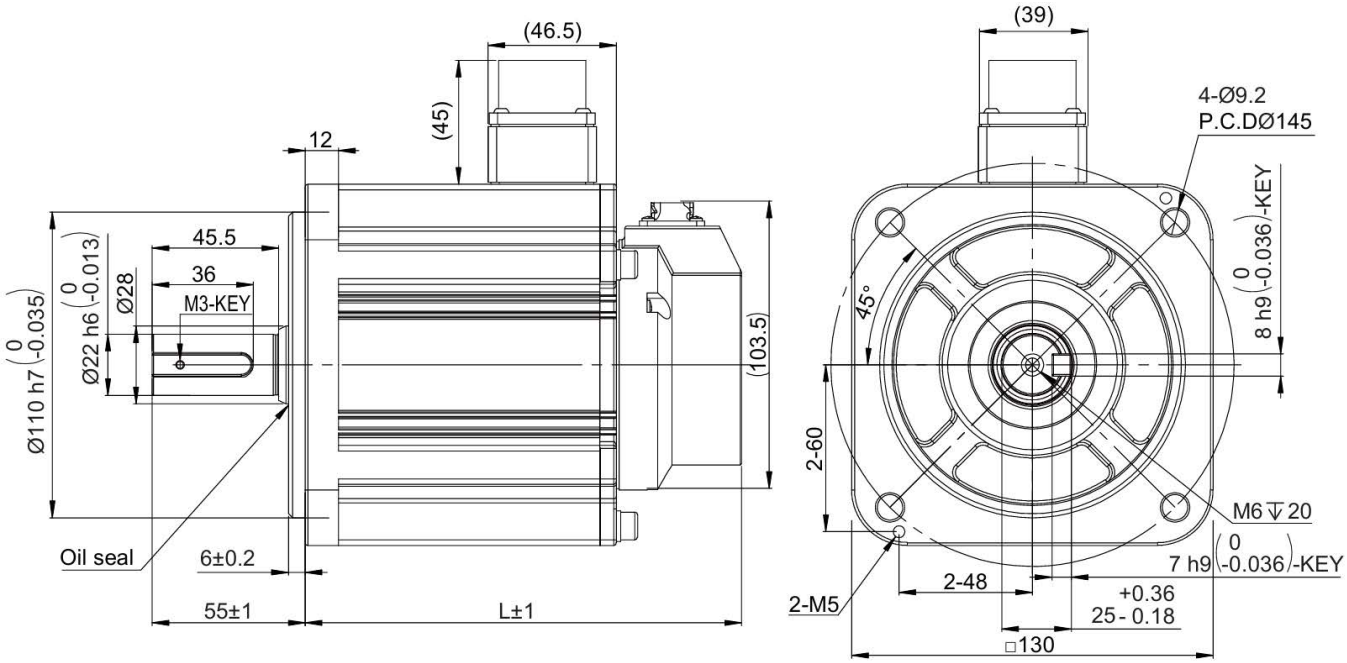

Model without brake	L
R88M-C6H85015T-OS2-GS	143
R88M-C6H1K315T-OS2-GS	157

With brake

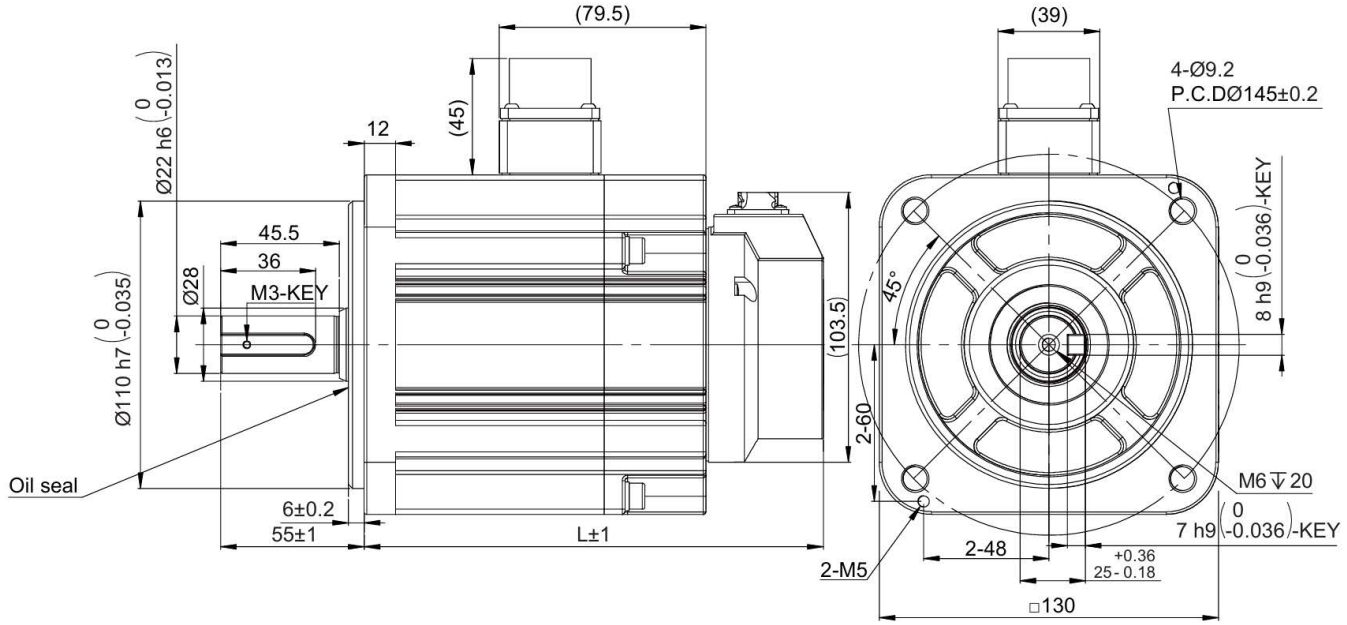

Model with brake	L
R88M-C6H85015T-BOS2-GS	176
R88M-C6H1K315T-BOS2-GS	190

1500 rpm motors (400 V, 850 W to 1.8 kW)

Without brake

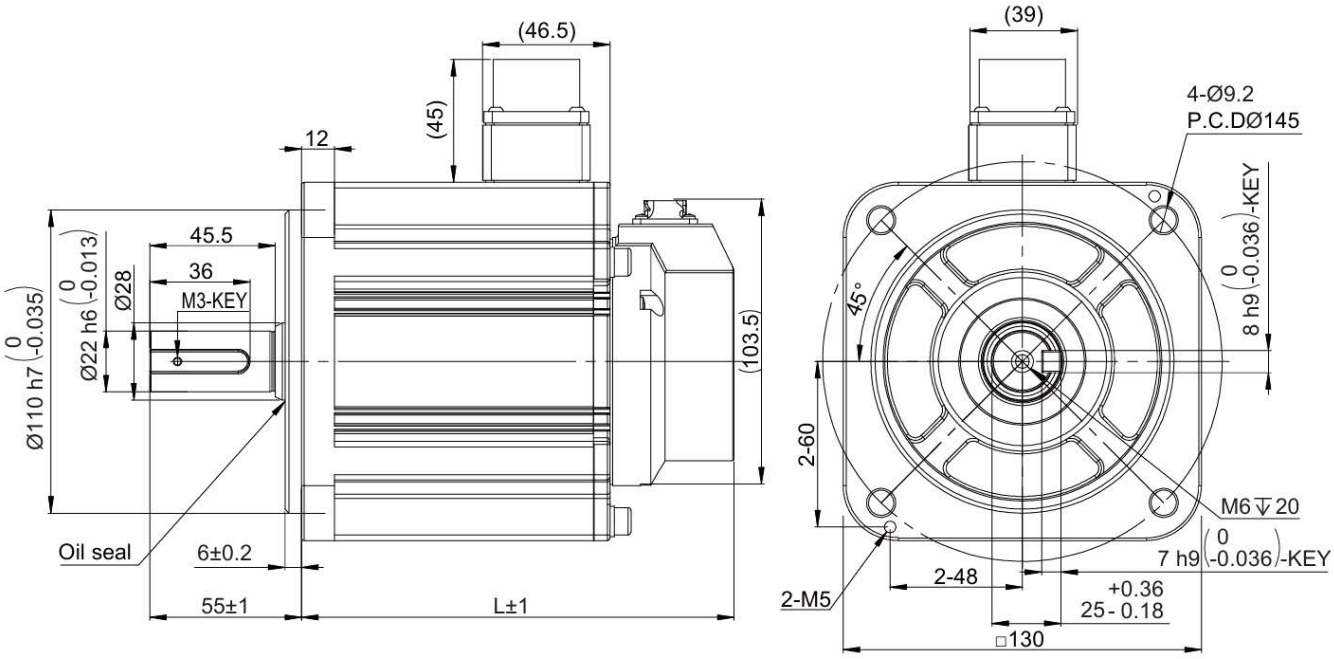

Model without brake	L
R88M-C6H85015C-OS2-GS	143
R88M-C6H1K315C-OS2-GS	157
R88M-C6H1K815C-OS2-GS	174

With brake

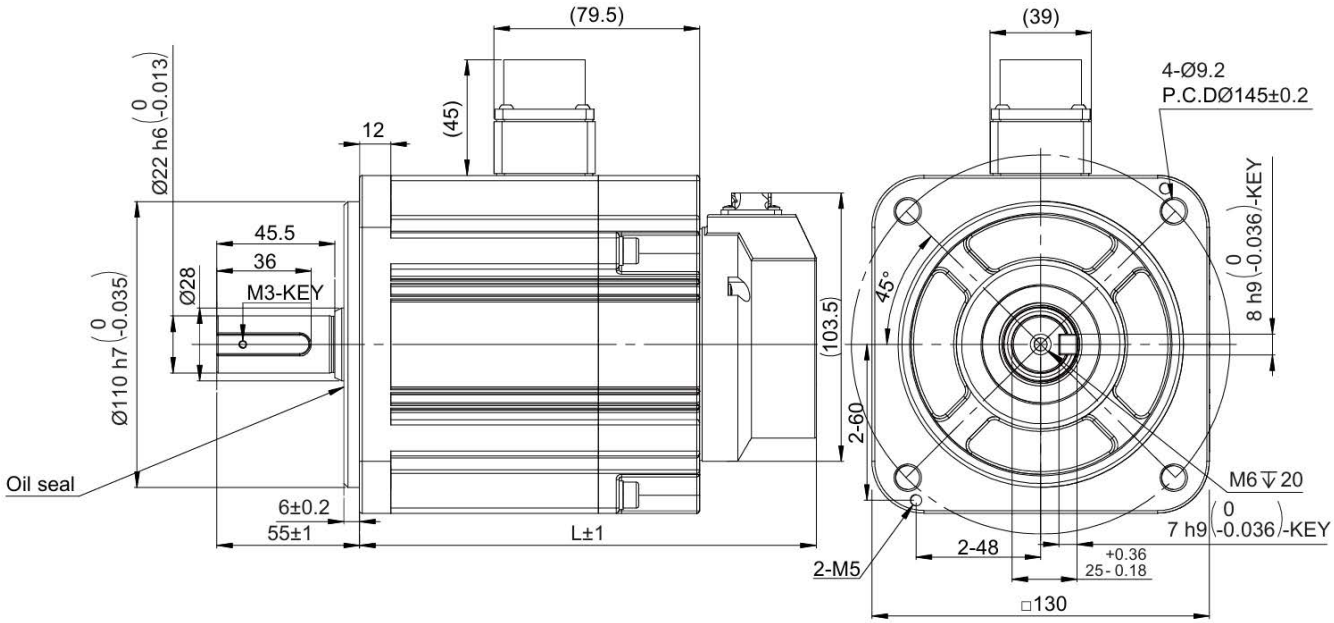

Model with brake	L
R88M-C6H85015C-BOS2-GS	176
R88M-C6H1K315C-BOS2-GS	190
R88M-C6H1K815C-BOS2-GS	207

1500 rpm motors (400 V, 2.9 kW to 4.4 kW)

Without brake

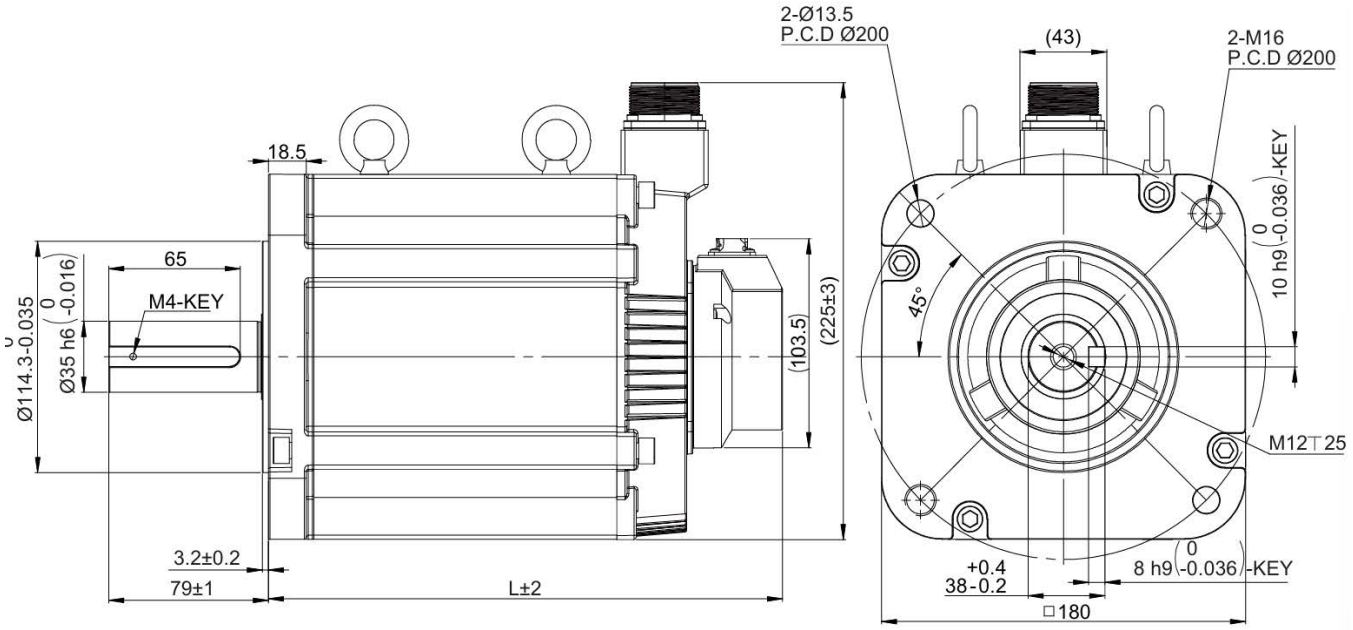

Model without brake	L
R88M-C6H2K915C-OS2-GS	188
R88M-C6H4K415C-OS2-GS	213

With brake

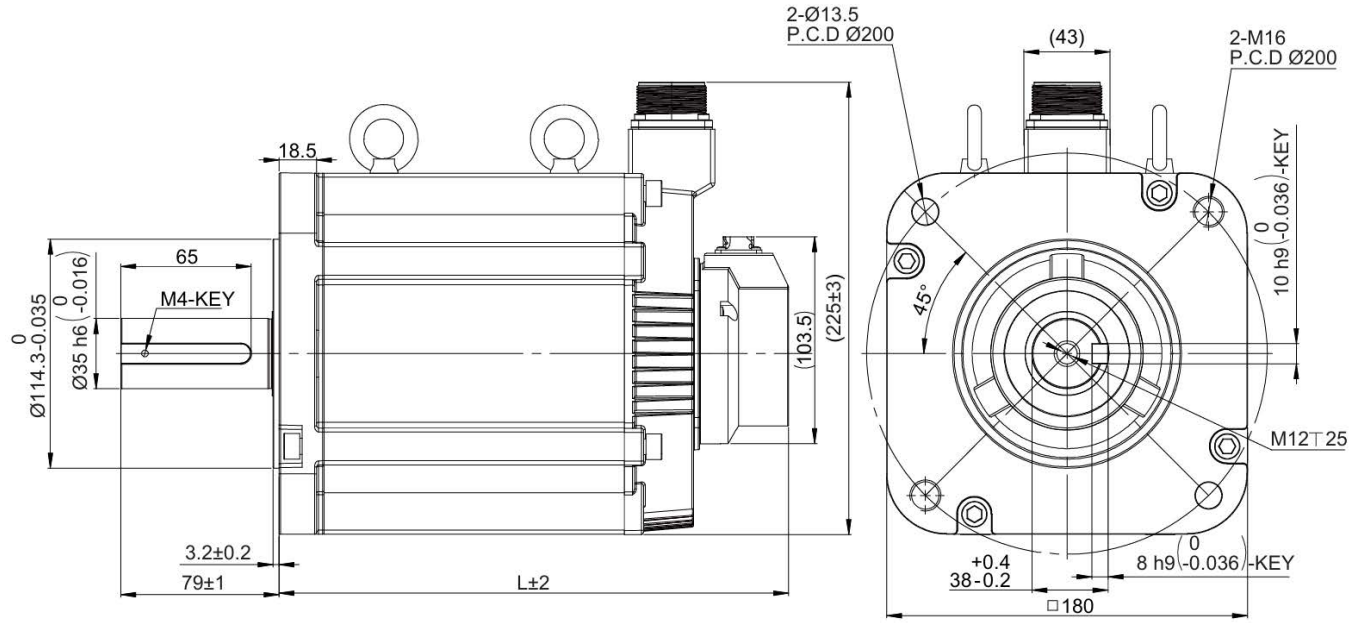

Model with brake	L
R88M-C6H2K915C-BOS2-GS	229
R88M-C6H4K415C-BOS2-GS	254

1500 rpm motors (400 V, 5.5 kW to 7.5 kW)

Without brake

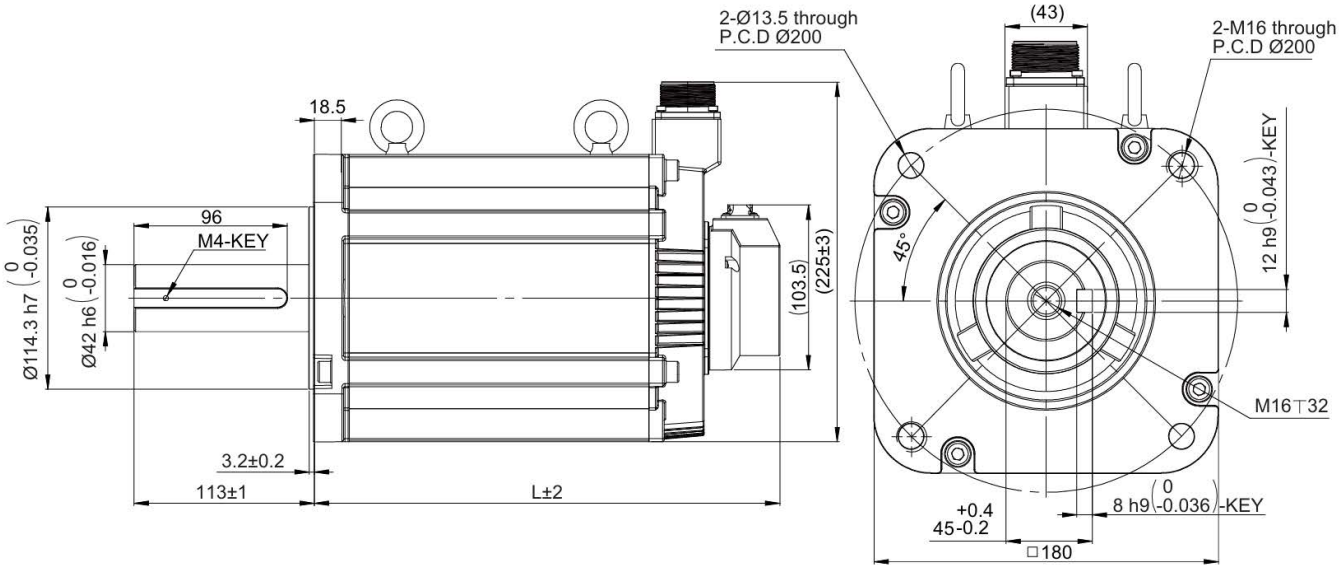

Model without brake	L
R88M-C6H5K515C-OS2-GS	227
R88M-C6H7K515C-OS2-GS	292

With brake

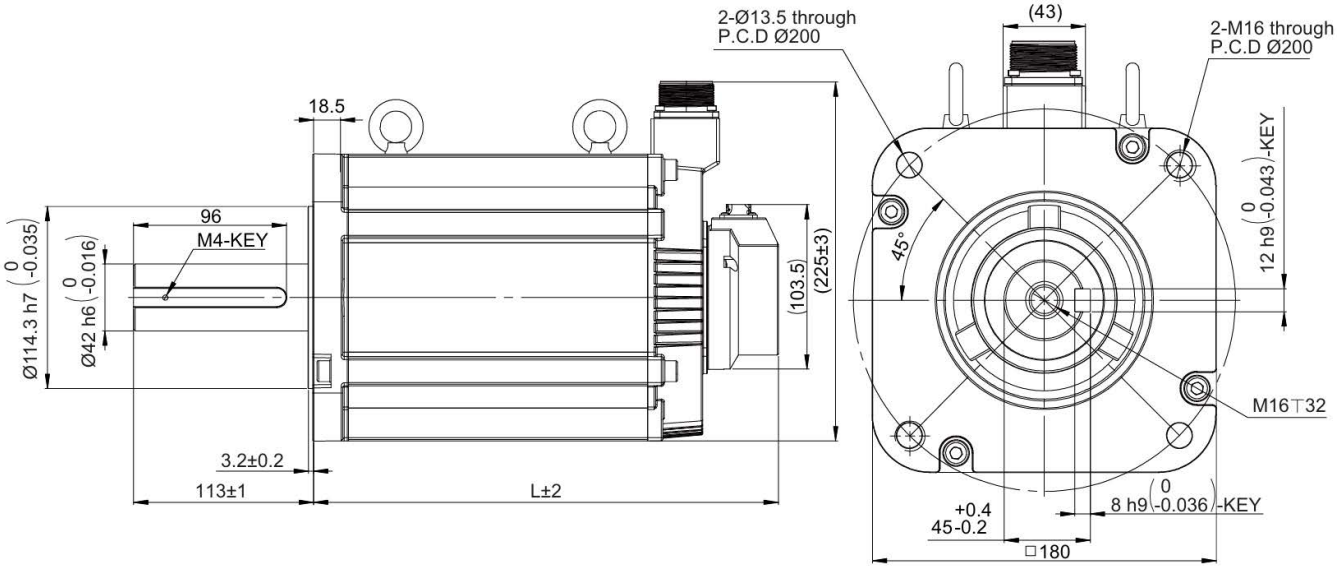

Model with brake	L
R88M-C6H5K515C-BOS2-GS	268
R88M-C6H7K515C-BOS2-GS	333

Installation

Single-phase 230 V, 200 W to 750 W models

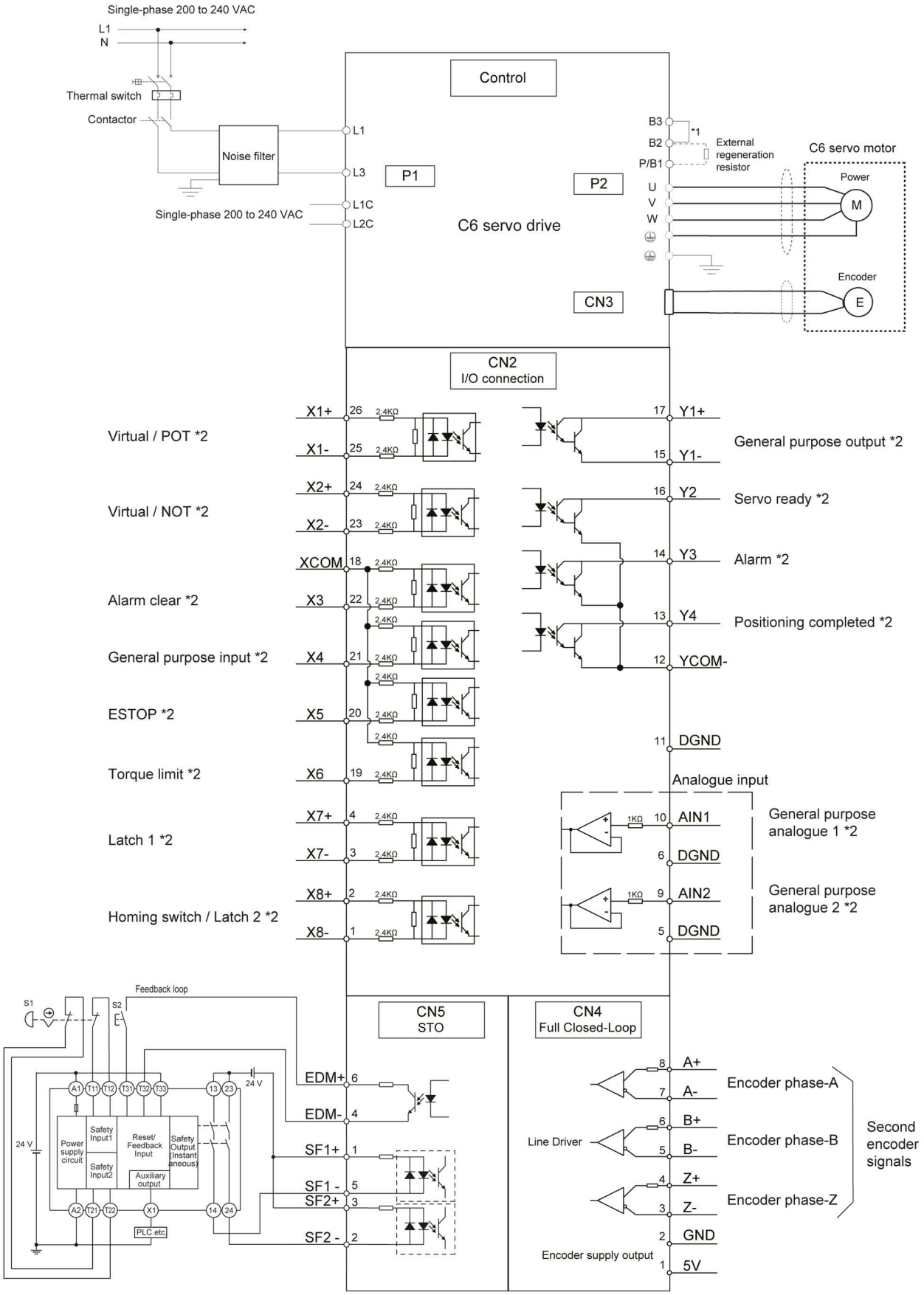

*1 B2 and B3 are short-circuited. If the internal regenerative resistor is insufficient, remove the wire between B2 and B3 and connect an external regenerative resistor between P/B1 and B2.
*2 These are the default settings. Please configure them according to the application.
*3 Wiring diagram example using the G9SX safety unit. If a safety unit is not used, keep the factory safety bypass connector installed in the CN5.

Single-phase 230 V, 1 kW to 1.5 kW models

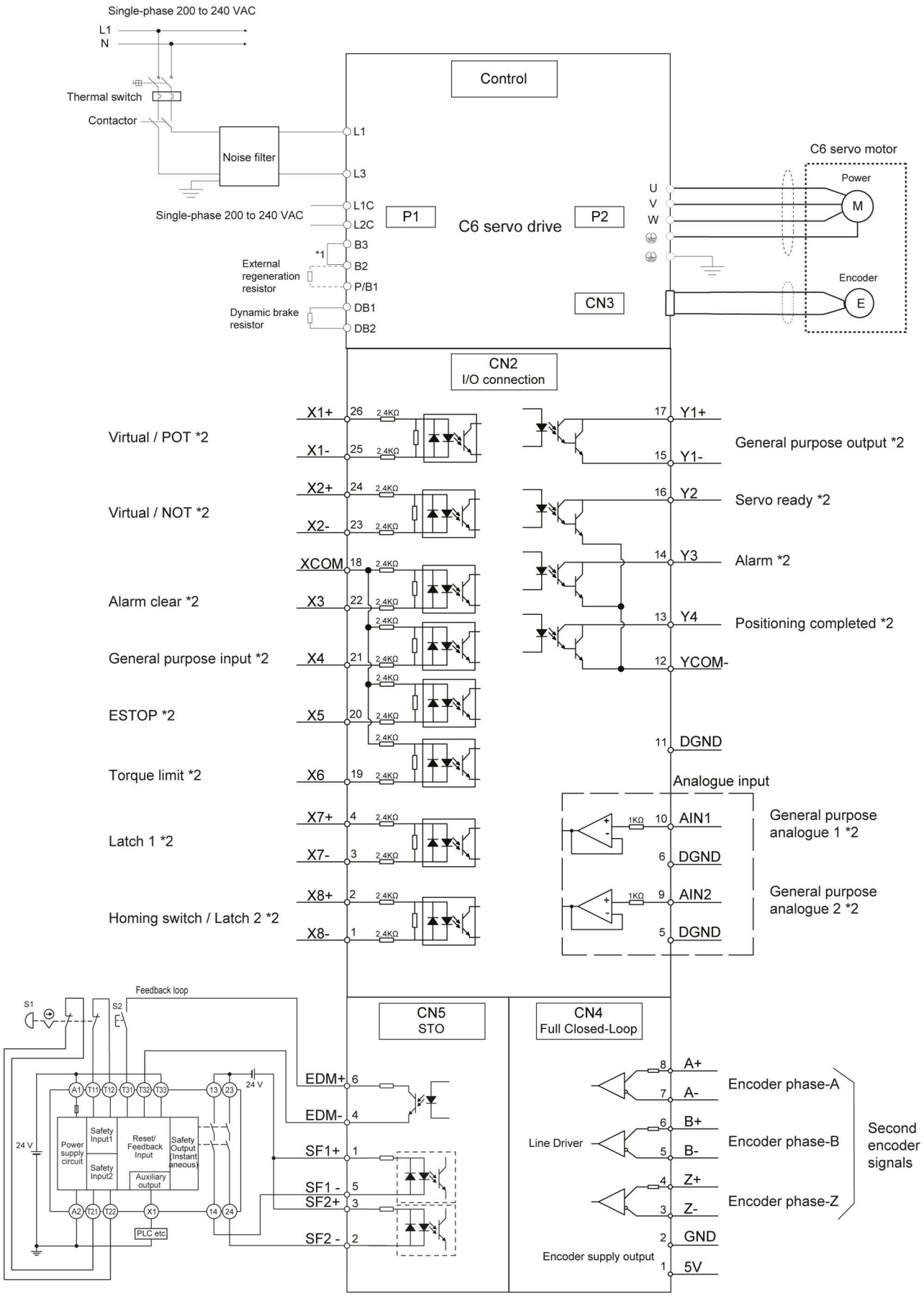

*1 B2 and B3 are short-circuited. If the internal regenerative resistor is insufficient, remove the wire between B2 and B3 and connect an external regenerative resistor between P/B1 and B2.
*2 These are the default settings. Please configure them according to the application.
*3 Wiring diagram example using the G9SX safety unit. If a safety unit is not used, keep the factory safety bypass connector installed in the CN5.

Three-phase 400 V, 1.5 kW to 3 kW models

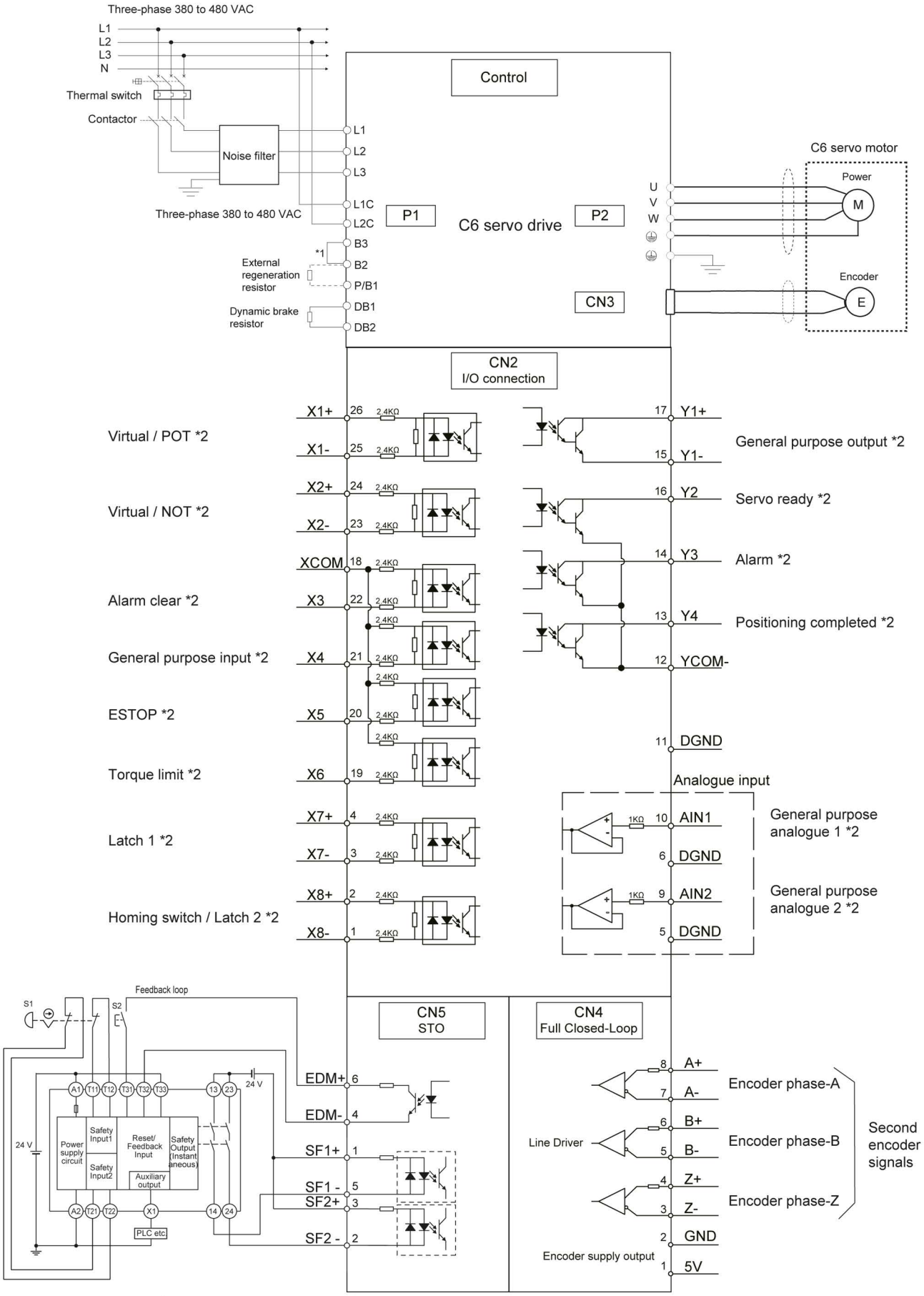

*1 B2 and B3 are short-circuited. If the internal regenerative resistor is insufficient, remove the wire between B2 and B3 and connect an external regenerative resistor between P/B1 and B2.
*2 These are the default settings. Please configure them according to the application.
*3 Wiring diagram example using the G9SX safety unit. If a safety unit is not used, keep the factory safety bypass connector installed in the CN5.

Three-phase 400 V, 5 kW to 7.5 kW models

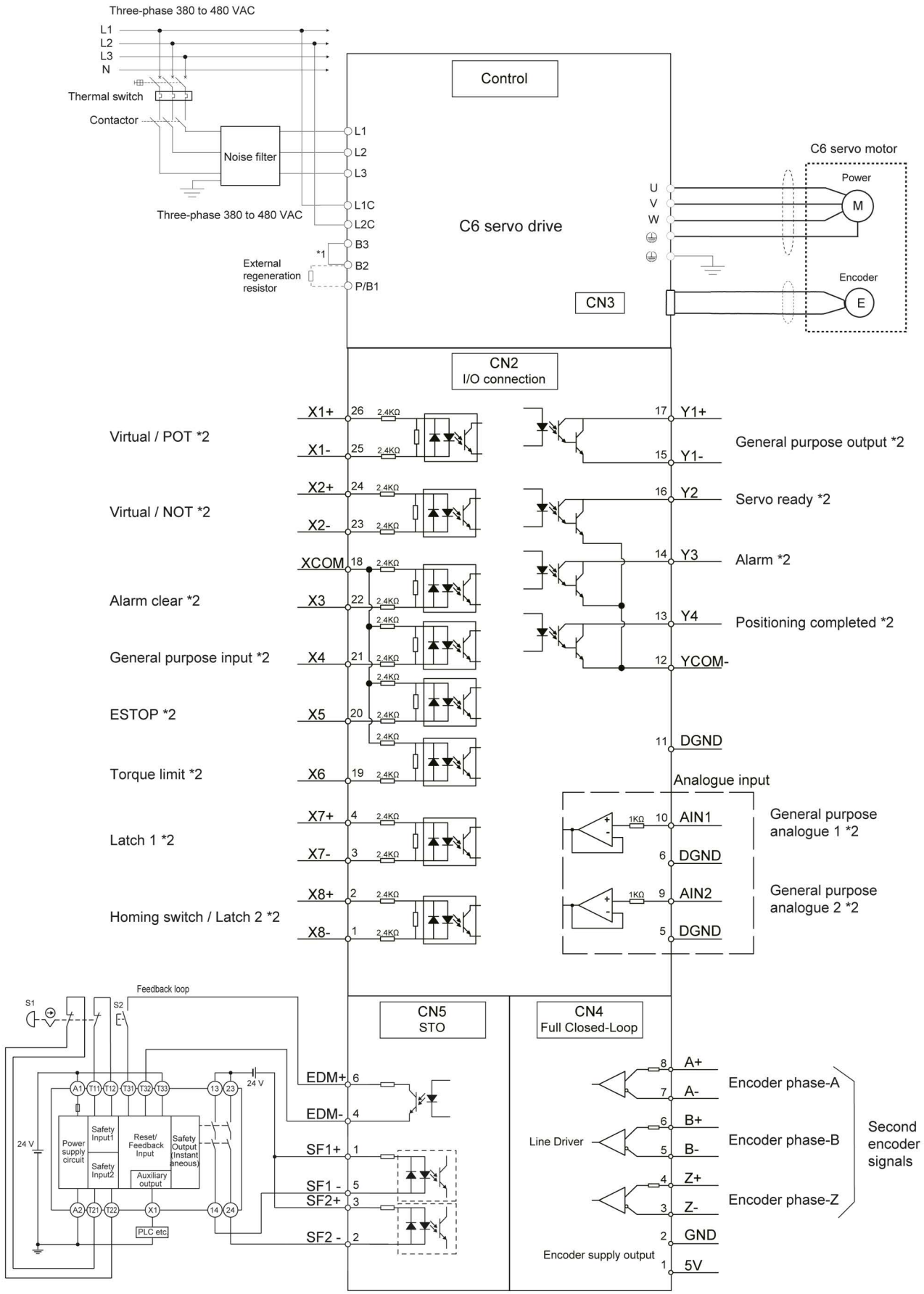

*1 B2 and B3 are short-circuited. If the internal regenerative resistor is insufficient, remove the wire between B2 and B3 and connect an external regenerative resistor between P/B1 and B2.
*2 These are the default settings. Please configure them according to the application.
*3 Wiring diagram example using the G9SX safety unit. If a safety unit is not used, keep the factory safety bypass connector installed in the CN5.

Ordering information

(Refer to servo drive chapter)

Drive options ②

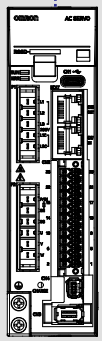

C6 servo drive

C6 servo motor (Flange size 80 mm or less)

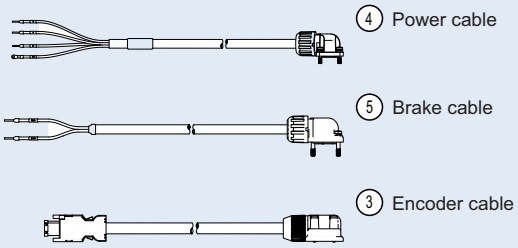

C6 servo motor (Flange size 100 mm or more)

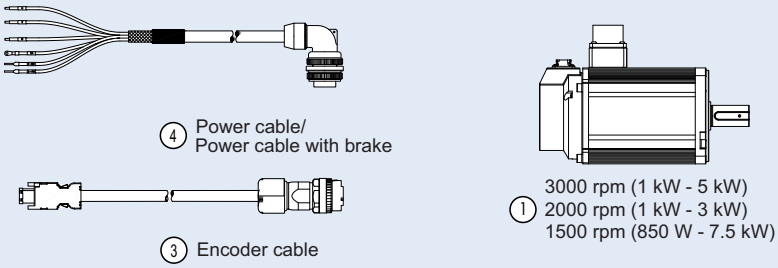

Motor and drive combinations:

Servo motors 3000 rpm (50 W to 5 kW)

Symbol	Voltage	Brake option	Rated torque	Capacity	①Servo motor model	②Compatible servo drive
①②	230 V	Without brake	0.16 N·m	50 W	R88M-C6H05030T-S2-GS	R881D-C6N02H-ECT-GS
			0.32 N·m	100 W	R88M-C6H10030T-S2-GS	
			0.64 N·m	200 W	R88M-C6H20030T-S2-GS	
			1.27 N·m	400 W	R88M-C6H40030T-S2-GS	R88D-C6N04H-ECT-GS
			2.4 N·m	750 W	R88M-C6H75030T-S2-GS	R88D-C6N08H-ECT-GS
			3.2 N·m	1 kW	R88M-C6H1K030T-S2-GS	R88D-C6N10H-ECT-GS
			3.2 N·m	1 kW	R88M-C6L1K030T-OS2-10GS	
			4.8 N·m	1.5 kW	R88M-C6L1K530T-OS2-GS	R88D-C6N15H-ECT-GS
		With brake	0.16 N·m	50 W	R88M-C6H05030T-BS2-GS	R88D-C6N02H-ECT-GS
			0.32 N·m	100 W	R88M-C6H10030T-BS2-GS	
			0.64 N·m	200 W	R88M-C6H20030T-BS2-GS	
			1.27 N·m	400 W	R88M-C6H40030T-BS2-GS	R88D-C6N04H-ECT-GS
			2.4 N·m	750 W	R88M-C6H75030T-BS2-GS	R88D-C6N08H-ECT-GS
			3.2 N·m	1 kW	R88M-C6H1K030T-BS2-GS	R88D-C6N10H-ECT-GS
			3.2 N·m	1 kW	R88M-C6L1K030T-BOS2-10GS	
			4.8 N·m	1.5 kW	R88M-C6L1K530T-BOS2-GS	R88D-C6N15H-ECT-GS

Symbol	Voltage	Brake option	Rated torque	Capacity	①Servo motor model	②Compatible servo drive
①②	400 V	Without brake	3.2 N·m	1 kW	R88M-C6L1K030C-OS2-GS	R88D-C6N15F-ECT-GS
			4.8 N·m	1.5 kW	R88M-C6L1K530C-OS2-GS	
			6.4 N·m	2 kW	R88M-C6L2K030C-OS2-GS	R88D-C6N30F-ECT-GS
			8 N·m	2.5 kW	R88M-C6L2K530C-OS2-GS	
			12.8 N·m	4 kW	R88M-C6L4K030C-OS2-GS	R88D-C6N50F-ECT-GS
			16 N·m	5 kW	R88M-C6L5K030C-OS2-GS	
		With brake	3.2 N·m	1 kW	R88M-C6L1K030C-BOS2-GS	R88D-C6N15F-ECT-GS
			4.8 N·m	1.5 kW	R88M-C6L1K530C-BOS2-GS	
			6.4 N·m	2 kW	R88M-C6L2K030C-BOS2-GS	R88D-C6N30F-ECT-GS
			8 N·m	2.5 kW	R88M-C6L2K530C-BOS2-GS	
			12.8 N·m	4 kW	R88M-C6L4K030C-BOS2-GS	R88D-C6N50F-ECT-GS
			16 N·m	5 kW	R88M-C6L5K030C-BOS2-GS	

Servo motors 2000 rpm (1 kW to 3 kW)

Symbol	Voltage	Brake option	Rated torque	Capacity	①Servo motor model	②Compatible servo drive
①②	230 V	Without brake	4.77 N·m	1 kW	R88M-C6M1K020T-OS2-GS	R88D-C6N10H-ECT-GS
			7.16 N·m	1.5 kW	R88M-C6M1K520T-OS2-GS	R88D-C6N15H-ECT-GS
		With brake	4.77 N·m	1 kW	R88M-C6M1K020T-BOS2-GS	R88D-C6N10H-ECT-GS
			7.16 N·m	1.5 kW	R88M-C6M1K520T-BOS2-GS	R88D-C6N15H-ECT-GS
	400 V	Without brake	4.77 N·m	1 kW	R88M-C6M1K020C-OS2-GS	R88D-C6N15F-ECT-GS
			7.16 N·m	1.5 kW	R88M-C6M1K520C-OS2-GS	
			9.55 N·m	2 kW	R88M-C6M2K020C-OS2-GS	R88D-C6N30F-ECT-GS
			14.3 N·m	3 kW	R88M-C6M3K020C-OS2-GS	
		With brake	4.77 N·m	1 kW	R88M-C6M1K020C-BOS2-GS	R88D-C6N15F-ECT-GS
			7.16 N·m	1.5 kW	R88M-C6M1K520C-BOS2-GS	
			9.55 N·m	2 kW	R88M-C6M2K020C-BOS2-GS	R88D-C6N30F-ECT-GS
			14.3 N·m	3 kW	R88M-C6M3K020C-BOS2-GS	

Servo motors 1500 rpm (850 W to 7.5 kW)

Symbol	Voltage	Brake option	Rated torque	Capacity	①Servo motor model	②Compatible servo drive
①②	230 V	Without brake	5.39 N·m	850 W	R88M-C6H85015T-OS2-GS	R88D-C6N10H-ECT-GS
			8.34 N·m	1.3 kW	R88M-C6H1K315T-OS2-GS	R88D-C6N15H-ECT-GS
		With brake	5.39 N·m	850 W	R88M-C6H85015T-BOS2-GS	R88D-C6N10H-ECT-GS
			8.34 N·m	1.3 kW	R88M-C6H1K315T-BOS2-GS	R88D-C6N15H-ECT-GS

Symbol	Voltage	Brake option	Rated torque	Capacity	①Servo motor model	②Compatible servo drive
①②	400 V	Without brake	5.39 N·m	850 W	R88M-C6H85015C-OS2-GS	R88D-C6N15F-ECT-GS
			8.34 N·m	1.3 kW	R88M-C6H1K315C-OS2-GS	
			11.5 N·m	1.8 kW	R88M-C6H1K815C-OS2-GS	R88D-C6N30F-ECT-GS
			18.5 N·m	2.9 kW	R88M-C6H2K915C-OS2-GS	
			28 N·m	4.4 kW	R88M-C6H4K415C-OS2-GS	R88D-C6N50F-ECT-GS
			35 N·m	5.5 kW	R88M-C6H5K515C-OS2-GS	R88D-C6N60F-ECT-GS
			48 N·m	7.5 kW	R88M-C6H7K515C-OS2-GS	R88D-C6N75F-ECT-GS
		With brake	5.39 N·m	850 W	R88M-C6H85015C-BOS2-GS	R88D-C6N15F-ECT-GS
			8.34 N·m	1.3 kW	R88M-C6H1K315C-BOS2-GS	
			11.5 N·m	1.8 kW	R88M-C6H1K815C-BOS2-GS	R88D-C6N30F-ECT-GS
			18.5 N·m	2.9 kW	R88M-C6H2K915C-BOS2-GS	
			28 N·m	4.4 kW	R88M-C6H4K415C-BOS2-GS	R88D-C6N50F-ECT-GS
			35 N·m	5.5 kW	R88M-C6H5K515C-BOS2-GS	R88D-C6N60F-ECT-GS
			48 N·m	7.5 kW	R88M-C6H7K515C-BOS2-GS	R88D-C6N75F-ECT-GS

Encoder cables

Symbol	Applicable servo motor			Model	Appearance
③	R88M-C6H (050/100/200/400/750/1K0)30T-[]	Without battery	1.5 m	R88A-CRCA001-5CF-IE	
			3 m	R88A-CRCA003CF-IE	
			5 m	R88A-CRCA005CF-IE	
			10 m	R88A-CRCA010CF-IE	
			15 m	R88A-CRCA015CF-IE	
			20 m	R88A-CRCA020CF-IE	
		With battery	1.5 m	R88A-CRCA001-5CF-BS-IE	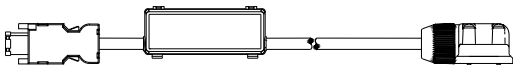
			3 m	R88A-CRCA003CF-BS-IE	
			5 m	R88A-CRCA005CF-BS-IE	
			10 m	R88A-CRCA010CF-BS-IE	
			15 m	R88A-CRCA015CF-BS-IE	
			20 m	R88A-CRCA020CF-BS-IE	
	R88M-C6L1K030T-[]-10 R88M-C6L1K530T-[] R88M-C6L(1K0/1K5/2K0/2K5/4K0/5K0)30C-[] R88M-C6M(1K0/1K5)20T-[] R88M-C6M(1K0/1K5/2K0/3K0)20C-[] R88M-C6H(850/1K3)15T-[] R88M-C6H(850/1K3/1K8/2K9/4K4/5K5/7K5)15C-[]	Without battery	1.5 m	R88A-CRCB001-5NF-IE	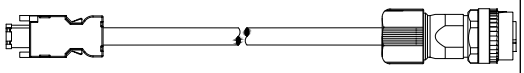
			3 m	R88A-CRCB003NF-IE	
			5 m	R88A-CRCB005NF-IE	
			10 m	R88A-CRCB010NF-IE	
			15 m	R88A-CRCB015NF-IE	
			20 m	R88A-CRCB020NF-IE	
		With battery	1.5 m	R88A-CRCB001-5NF-BS-IE	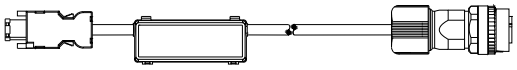
			3 m	R88A-CRCB003NF-BS-IE	
			5 m	R88A-CRCB005NF-BS-IE	
			10 m	R88A-CRCB010NF-BS-IE	
			15 m	R88A-CRCB015NF-BS-IE	
			20 m	R88A-CRCB020NF-BS-IE	

Power cables

Symbol	Applicable servo motor			Model	Appearance
④	For 230 V servo motors: R88M-C6H(050/100/200/400/750/1K0)30T-[] Note: For servo motors with brake (-BS2), the separate cable R88A-CACA[][][]-BF-IE is needed.	Without brake	1.5 m	R88A-CACA001-5SF-IE	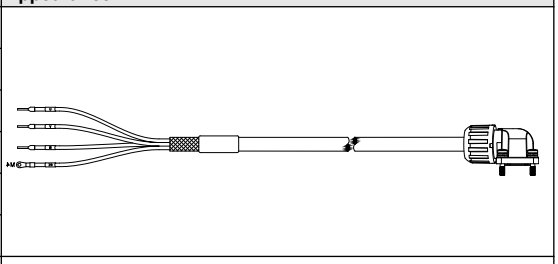
			3 m	R88A-CACA003SF-IE	
			5 m	R88A-CACA005SF-IE	
			10 m	R88A-CACA010SF-IE	
			15 m	R88A-CACA015SF-IE	
			20 m	R88A-CACA020SF-IE	
	For 230 V servo motors: R88M-C6L1K030T-[]-10 R88M-C6M(1K0/1K5)20T-[] R88M-C6H85015T-[] For 400 V servo motors: R88M-C6L(1K0/1K5/2K0/2K5)30C-[] R88M-C6M(1K0/1K5/2K0)20C-[] R88M-C6H(850/1K3/1K8)15C-[]	Without brake	1.5 m	R88A-CACC001-5SF-IE	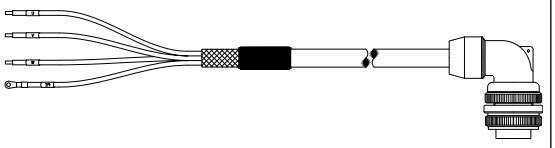
			3 m	R88A-CACC003SF-IE	
			5 m	R88A-CACC005SF-IE	
			10 m	R88A-CACC010SF-IE	
			15 m	R88A-CACC015SF-IE	
			20 m	R88A-CACC020SF-IE	
		With brake	1.5 m	R88A-CACC001-5BF-IE	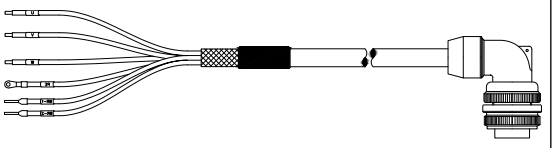
			3 m	R88A-CACC003BF-IE	
			5 m	R88A-CACC005BF-IE	
			10 m	R88A-CACC010BF-IE	
			15 m	R88A-CACC015BF-IE	
			20 m	R88A-CACC020BF-IE	
	For 230 V servo motors: R88M-C6L1K530T-[] R88M-C6H1K315T-[] For 400 V servo motors: R88M-C6L(4K0/5K0)30C-[] R88M-C6M3K020C-[]	Without brake	1.5 m	R88A-CACE001-5SF-IE	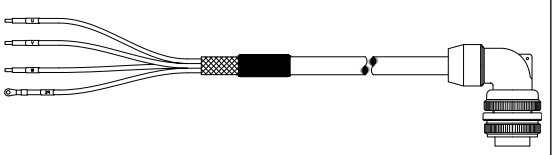
			3 m	R88A-CACE003SF-IE	
			5 m	R88A-CACE005SF-IE	
			10 m	R88A-CACE010SF-IE	
			15 m	R88A-CACE015SF-IE	
			20 m	R88A-CACE020SF-IE	
		With brake	1.5 m	R88A-CACE001-5BF-IE	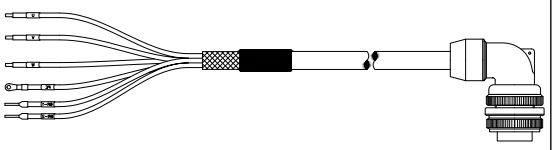
			3 m	R88A-CACE003BF-IE	
			5 m	R88A-CACE005BF-IE	
			10 m	R88A-CACE010BF-IE	
			15 m	R88A-CACE015BF-IE	
			20 m	R88A-CACE020BF-IE	
	For 400 V servo motors: R88M-C6H(2K9/4K4/5K5)15C-[]	Without brake	1.5 m	R88A-CACG001-5SF-IE	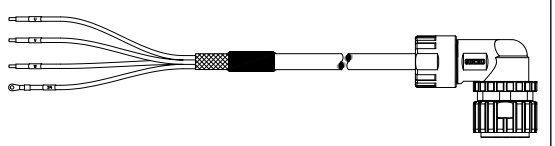
			3 m	R88A-CACG003SF-IE	
			5 m	R88A-CACG005SF-IE	
			10 m	R88A-CACG010SF-IE	
			15 m	R88A-CACG015SF-IE	
			20 m	R88A-CACG020SF-IE	
		With brake	1.5 m	R88A-CACG001-5BF-IE	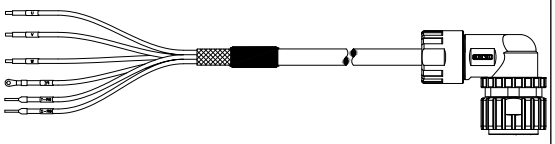
			3 m	R88A-CACG003BF-IE	
			5 m	R88A-CACG005BF-IE	
			10 m	R88A-CACG010BF-IE	
			15 m	R88A-CACG015BF-IE	
			20 m	R88A-CACG020BF-IE	

Symbol	Applicable servo motor			Model	Appearance
④	For 400 V servo motors: R88M-C6H7K515C-[]	Without brake	1.5 m	R88A-CACH001-5SF-IE	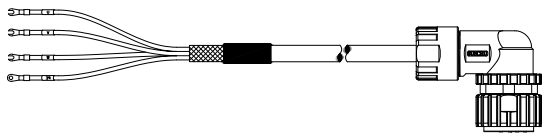
			3 m	R88A-CACH003SF-IE	
			5 m	R88A-CACH005SF-IE	
			10 m	R88A-CACH010SF-IE	
			15 m	R88A-CACH015SF-IE	
			20 m	R88A-CACH020SF-IE	
		With brake	1.5 m	R88A-CACH001-5BF-IE	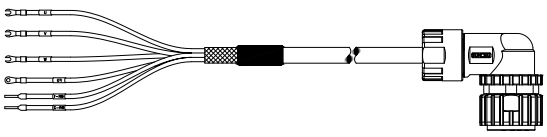
			3 m	R88A-CACH003BF-IE	
			5 m	R88A-CACH005BF-IE	
			10 m	R88A-CACH010BF-IE	
			15 m	R88A-CACH015BF-IE	
			20 m	R88A-CACH020BF-IE	

Brake cables

Symbol	Applicable servo motor		Model	Appearance
⑤	Brake cable only. For 230 V servo motors with brake: R88M-C6H(050/100/200/400/750/1K0)30T-[]	1.5 m	R88A-CACA001-5BF-IE	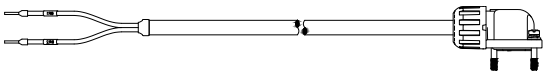
		3 m	R88A-CACA003BF-IE	
		5 m	R88A-CACA005BF-IE	
		10 m	R88A-CACA010BF-IE	
		15 m	R88A-CACA015BF-IE	
		20 m	R88A-CACA020BF-IE	

Filters

Applicable servo drive	Rated current	Leakage current	Rated voltage	Model
R88D-C6N02H-ECT-GS	2.4 A	9.9 mA	230 VAC	R88A-FIC6103-SE
R88D-C6N04H-ECT-GS	4.1 A			R88A-FIC6104-SE
R88D-C6N08H-ECT-GS	6.7 A			R88A-FIC6107-SE
R88D-C6N(10H/15H)-ECT-GS	13.8 A			R88A-FIC6114-SE
R88D-C6N(15F/30F)-ECT-GS	8 A	4.2 mA	400 VAC	R88A-FIC6308-SE
R88D-C6N(50F/60F/75F)-ECT-GS	21 A			R88A-FIC6321-SE

ALL DIMENSIONS SHOWN ARE IN MILLIMETERS.
To convert millimeters into inches, multiply by 0.03937. To convert grams into ounces, multiply by 0.03527.

Cat. No. I226E-EN-01A In the interest of product improvement, specifications are subject to change without notice.